Enclosures & Cabinets for Special Requirements
comercial@delvalle.es | www.delvallebox.com

STAINLESS STEEL FIRE EXTINGUISHER ENCLOSURE IP66



10 YEARS
STAINLESS ANTICORROSIVE **GUARANTEE**

5 YEARS
MECHANICAL PARTS **GUARANTEE**



WE PUT AT YOUR DISPOSAL

We offer over **45 years** providing solutions to demanding customers who require very specific characteristics and behaviour according to the sector and their needs.

WHEREVER YOU GO

We are committed to working closely with our customers, providing them with **exceptional service** and offering an advanced and extensive range of products with very competitive prices.

HIGH STANDARD OF QUALITY AND SERVICES

We only use materials provided by companies who offer the very **highest quality**, suitable and certified products. Our success is due to top quality assurance: ISO 9001, SGS, UL, TÜV, ISO 14000 and Ohsas 18001.

CUSTOMIZE TOTALLY YOUR ENCLOSURE

Our production systems can give custom-made solutions **on demand.** Every colour from RAL chart is available to be personalized. A variety of protection standards thanks to our own painting facilities.

CONTACT US

Confidentiality, reliability & quality

www.delvallebox.com
comercial@delvalle.es
+34 945 601 381

ALSO ONLINE

Please contact our technical sales department

A team of professionals with high experience and ability to solve all your queries



STAINLESS STEEL FIRE EXTINGUISHER ENCLOSURE IP66



Examples

The Main Goal of the Fire Extinguisher Enclosure, is to Provide a Quick and Safe Access to the Extinguishing Equipment

The stainless steel fire extinguisher enclosure IP66(W) is a security equipment to provide a fire extinguisher aimed to users, when they need it in an emergency. Directed to companies such as in food processing, food industry, tunnels,...
It's a perfect equipment when the fire extinguisher needs to be sealed from the outside to avoid dust and contamination.
The main goal of the fire extinguisher enclosure, is to provide a quick and safe access to the extinguishing equipment, before such emergency, with a sloping roof design that avoids the placement on top of materials and bacteria.
The quick access is made with two T closures.



FOR MORE INFORMATION CLICK HERE

APLICATIONS

- Food processing industry
- Tunnel
- White rooms
- Oil & Gas industry
- Petrochemistry
- Industry
- Food industy

STAINLESS STEEL FIRE EXTINGUISHER ENCLOSURE IP66

FEATURES

- Opening of the door at 120 °. Standard opening to the left.
- Transparent polycarbonate door, self-extinguishing according to the fire.
- The fire extinguisher enclosure is a security equipment which has a bracket to support the fire extinguisher. This bracket is secured to the plate to allow a quick use of the extinguishing equipment.
- The fire extinguisher enclosure is installed in enabled tunnel's areas to host the security equipment.
- The sloping roof made design avoids the placement objects on the top of the box. It's has a polished surface finish in vertical direction. The design also avoids the proliferation problems caused from bacteria and virus in the box's surface.
- Hygienic store and water protection.
- It's possible to visualize the security equipment because of the transparent glass screen.
- Fast door access, caused by the two T closures, which allow an easy and simple operation.
- IP66(W) protection.
- It's advisable the use of wall supports.



OPTIONS

- Custom made based on your needs.
- Manufactured in stainless steel AISI 316L EN 14404.
- Transparent glass door.
- It's possible to be wider for two fire extinguishers.
- Up to IP69K -DIN 40050-9.



STAINLESS STEEL FIRE EXTINGUISHER ENCLOSURE IP66

NORMATIVE

- IP66(W) by IEC 60529 rule.
- DIN EN ISO 14 159 Hygienic security to set up the machine function.
- Food industry machine directive (2006/42/CE).
- EHEDG Guideline Hygienic Design apart. 13 of devices for open processes.
- DIN EN 1672-2:2006 Machinery requirements for the food industry.
- Impact resistance IK10, IEC62262.
- Obey with RoHs regulations.
- Food industry rules, materials which are in contact with food (CE 1935/2004).
- Obey with low tension directive 2014/35/UE.
- UL Nema 4x, 12, 3r and 1 certificate upon request. N° File E342220.
- Maximum voltage 1000 V.
- Temperature resistance: From -40 °C to +100 °C (reduced exposure +160 °C).
- Sillicone gasket is optional: From -60 °C to +180 °C (reduced exposure +350 °C).

PLAN AND REFERENCES

CLICK HERE TO DOWNLOAD
THE FILES CAD - PLANS - CERTIFICATES

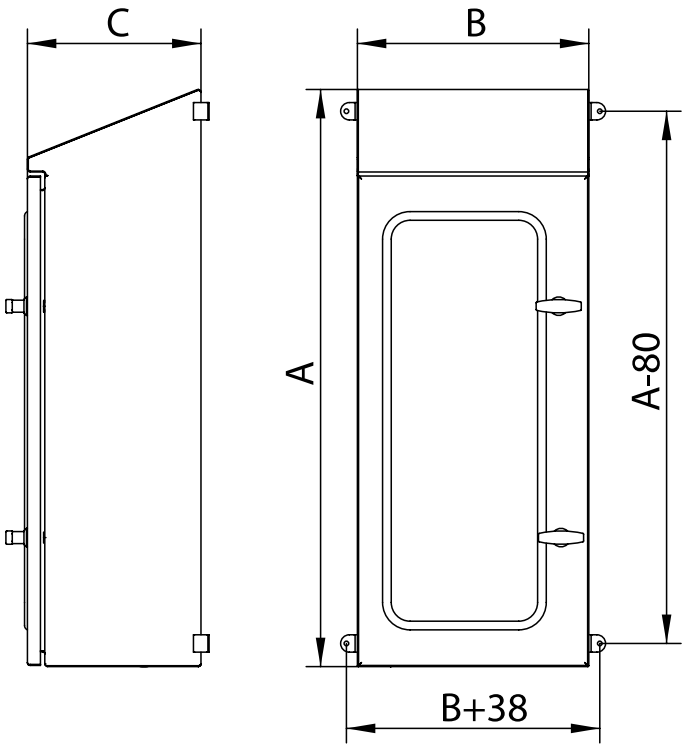

5 YEARS
MECHANICAL PARTS
GUARANTEE

10 YEARS
STAINLESS
ANTICORROSIVE
GUARANTEE

REFERENCE	DIMENSIONS (mm)		
STAINLESS STEEL FIRE EXTINGUISHER ENCLOSURE	HEIGHT -A-	WIDTH -B-	DEPTH -C-
MVAJ.XT104030	1000	400	300

Phone +34 945 601 381
comercial@delvalle.es | www.delvallebox.com

Consult us without obligation

Confidentiality, reliability & quality

DELVALLE OFFERS
CUSTOMIZED SOLUTIONS

FOR MORE INFORMATION CLICK HERE

www.delvallebox.com
comercial@delvalle.es
+34 945 601 381
ALSO ONLINE

STAINLESS STEEL INDUSTRIAL ENCLOSURES



OUTDOOR HEAVY DUTY ELECTRICAL ENCLOSURES

OUTDOOR TELECOM 19 RACKS & CABINETS



GALVANIZED STEEL ELECTRICAL ENCLOSURES

HYGIENIC DESIGN ENCLOSURES



ALUMINIUM ELECTRICAL ENCLOSURES

delvalle®

Consult us without obligation

Confidentiality, reliability & quality

DELVALLE OFFERS
CUSTOMIZED SOLUTIONS

www.delvallebox.com
comercial@delvalle.es
+34 945 601 381

ALSO ONLINE

➔ FOR MORE INFORMATION CLICK HERE

WATERPROOF SHEET STEEL ELECTRICAL ENCLOSURES



CLIMATE CONTROL COOLING FOR ELECTRICAL ENCLOSURES

NEMA ELECTRICAL ENCLOSURES TYPE 1-3R-4X-12



MODULAR DISTRIBUTION ENCLOSURES

EMC ELECTRICAL ENCLOSURES SOLUTIONS



CABLE GLANDS & ENTRY SEALS FOR CABINETS

delvalle®

Enclosures & Cabinets for Special Requirements





Paso del Prao, 6. 01320 Oyón (Álava). Spain
P. +34 945 601 381
www.delvallebox.com - comercial@delvalle.es

Contact us, we will be available at any time

CE TÜV Rheinland UL CERTIFIED SAFETY US-CA E342220 greenproduct RoHS WEEE