Enclosures & Cabinets for Special Requirements
comercial@delvalle.es | www.delvallebox.com

STAINLESS STEEL RACK CABINET SPLIT BODY IP55





WE PUT AT YOUR DISPOSAL

We offer over **45 years** providing solutions to demanding customers who require very specific characteristics and behaviour according to the sector and their needs.

WHEREVER YOU GO

We are committed to working closely with our customers, providing them with **exceptional service** and offering an advanced and extensive range of products with very competitive prices.

HIGH STANDARD OF QUALITY AND SERVICES

We only use materials provided by companies who offer the very **highest quality**, suitable and certified products. Our success is due to top quality assurance: ISO 9001, SGS, UL, TÜV, ISO 14000 and Ohsas 18001.

CUSTOMIZE TOTALLY YOUR ENCLOSURE

Our production systems can give custom-made solutions **on demand.** Every colour from RAL chart is available to be personalized. A variety of protection standards thanks to our own painting facilities.

CONTACT US

Confidentiality, reliability & quality

www.delvallebox.com
comercial@delvalle.es
+34 945 601 381

ALSO ONLINE

Please contact our technical sales department

A team of professionals with high experience and ability to solve all your queries



STAINLESS STEEL RACK CABINET SPLIT BODY IP55



Examples

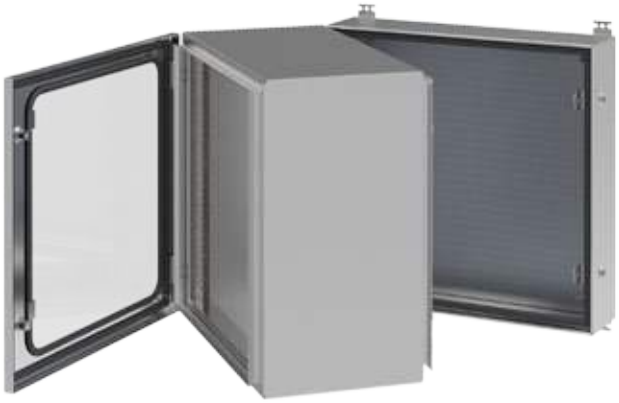

Available in Any Measure

Divided body stainless steel cabinet painted in RAL 7032 or 7035 with three bodies ideal for electronic components and 19" rack
Fitted with transparent door (Tempered glass or polycarbonate) with an open front and rear to facilitate the assembly of components.
Standard models available from 3UA to 15UA. Taller and larger cabinet sizes available, thus increasing the number of UAS.
Built in compliance with CE regulations.

FOR MORE INFORMATION CLICK HERE

ADVANTAGES

- Customised to your measurements.
- Painted in any RAL colour.
- Safety glass door.
- Manufactured in stainless steel AISI 304 or 316, EN-14401.
- EMC protection joint between the frame and the contact surfaces, ensuring perfect electrical connection. 2014/30/UE standard.

APPLICATIONS

- Weather stations
- Telecommunications
- Optical fiber
- Video surveillance,...

OPTIONS

EMC protection joint between the frame and the contact surfaces, ensuring perfect electrical connection 2014/30/UE standard.

Phone +34 945 601 381
comercial@delvalle.es | www.delvallebox.com

STAINLESS STEEL RACK CABINET SPLIT BODY IP55

NORMATIVE

- To IP55 Norm IEC 60529.
- AISI 316, EN-14401.
- Normative 2014/30/UE.
- Fixing of Equipment DIN 41494 and IEC 297 (for 19 ").
- Fixing of IEC 917 Equipment (for ETSI or Metric 515m / m).
- Electromagnetic protection I EC TS 61587-3 (optional).
- Electromagnetic compatibility EMC and RFI (optional).
- Meets normative IEC 61969 Metal structures for electronic equipment in the open air.

PLAN

CLICK HERE TO DOWNLOAD
THE FILES CAD - PLANS - CERTIFICATES

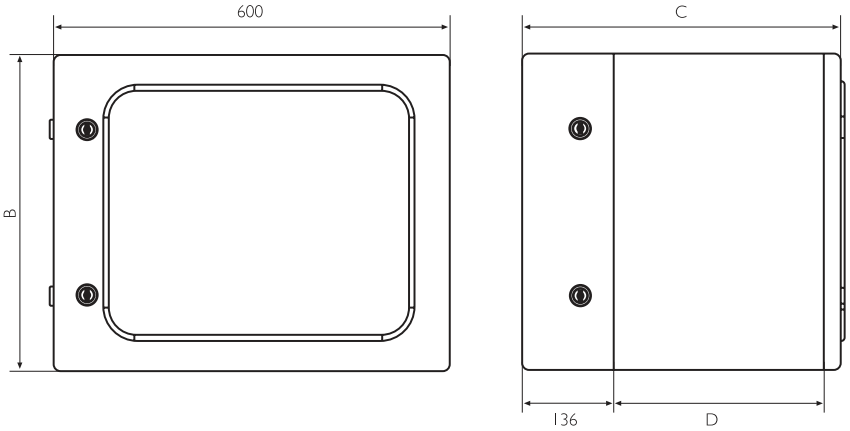



REFERENCES

REFERENCES		DIMENSIONS (mm)			
BLIND DOOR	POLYCARBONATE DOOR	B	C	D	U´s
MVAE602149	MVAE602149T	212	490	320	3UA
MVAE603449	MVAE603449T	345	490	320	6UA
MVAE604749	MVAE604749T	478	490	320	9UA
MVAE606149	MVAE606149T	612	490	320	12UA
MVAE607449	MVAE607449T	746	490	320	15UA
MVAE602139	MVAE602139T	212	390	220	3UA
MVAE603439	MVAE603439T	345	390	220	6UA
MVAE604739	MVAE604739T	478	390	220	9UA
MVAE606139	MVAE606139T	612	390	220	12UA
MVAE607439	MVAE607439T	746	390	220	15UA

delvalle®

Consult us without obligation

Confidentiality, reliability & quality

DELVALLE OFFERS **OTHER SOLUTIONS**

FOR MORE INFORMATION CLICK HERE

www.delvallebox.com
comercial@delvalle.es
+34 945 601 381

ALSO ONLINE

STAINLESS STEEL INDUSTRIAL ENCLOSURES



OUTDOOR HEAVY DUTY ELECTRICAL ENCLOSURES

OUTDOOR TELECOM 19 RACKS & CABINETS



GALVANIZED STEEL ELECTRICAL ENCLOSURES

HYGIENIC DESIGN ENCLOSURES



ALUMINIUM ELECTRICAL ENCLOSURES

delvalle®

Consult us without obligation

Confidentiality, reliability & quality

DELVALLE OFFERS **OTHER SOLUTIONS**

FOR MORE INFORMATION CLICK HERE

www.delvallebox.com
comercial@delvalle.es
+34 945 601 381

ALSO ONLINE

WATERPROOF SHEET STEEL ELECTRICAL ENCLOSURES



CLIMATE CONTROL COOLING FOR ELECTRICAL ENCLOSURES

NEMA ELECTRICAL ENCLOSURES TYPE 1-3R-4X-12



MODULAR DISTRIBUTION ENCLOSURES

EMC ELECTRICAL ENCLOSURES SOLUTIONS



CABLE GLANDS & ENTRY SEALS FOR CABINETS

delvalle®

Enclosures & Cabinets for Special Requirements





Paso del Prao, 6. 01320 Oyón (Álava). Spain
P. +34 945 601 381
www.delvallebox.com - comercial@delvalle.es

Contact us, we will be available at any time

CE TÜV Rheinland UL CERTIFIED SAFETY US-CA E342220 greenproduct RoHS WEEE