ECO FRIENDLY PRODUCT

delvalle®

INDUSTRIAL ENCLOSURE SOLUTIONS

comercial@delvalle.es | www.delvallebox.com

ROOF MOUNTED AIR CONDITIONERS IP54

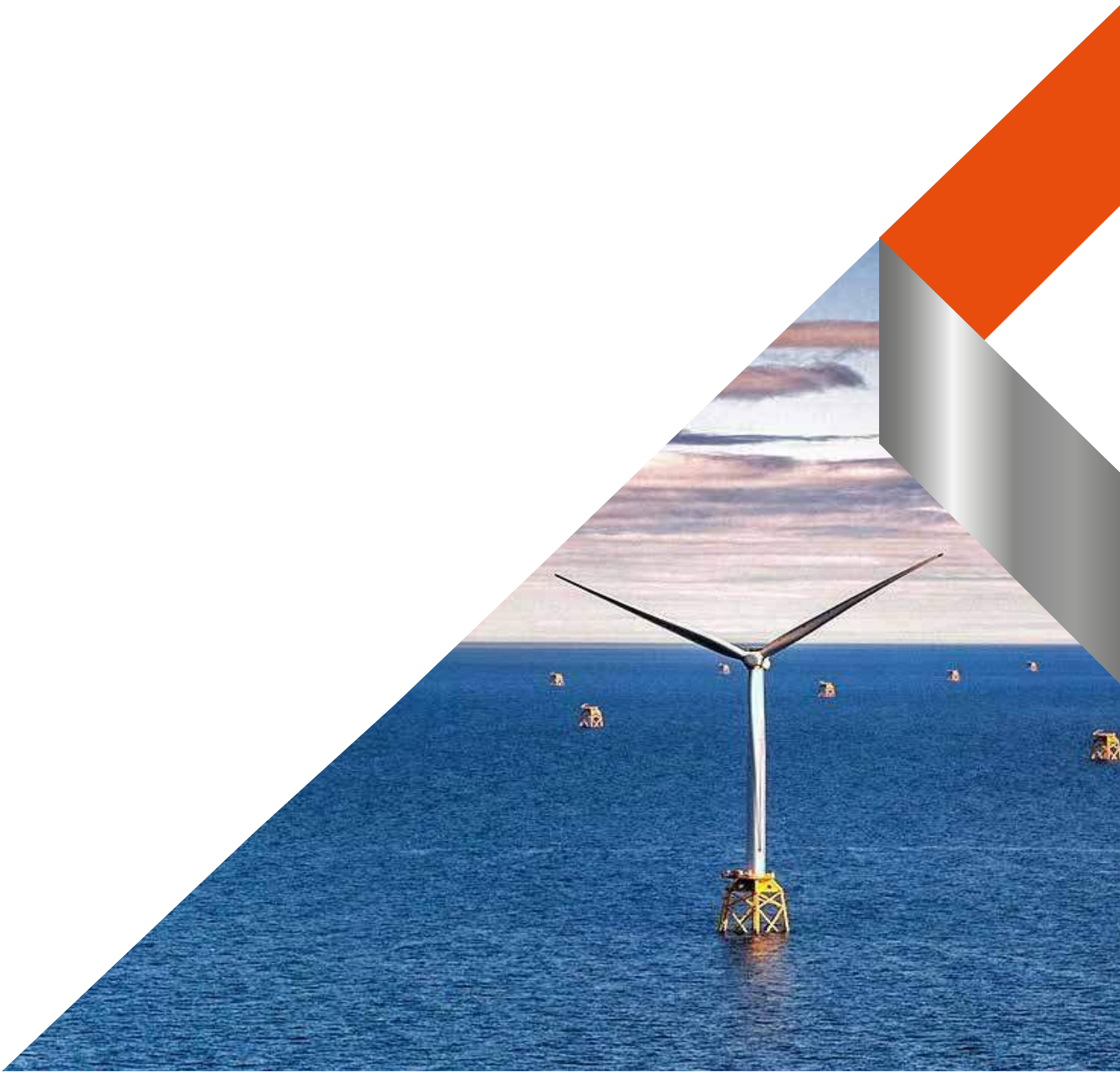



WE PUT AT YOUR DISPOSAL

We offer over **50 years** providing solutions to demanding customers who require very specific characteristics and behaviour according to the sector and their needs.

WHEREVER YOU GO

We are committed to working closely with our customers, providing them with **exceptional service** and offering an advanced and extensive range of products with very competitive prices.

HIGH STANDARD OF QUALITY AND SERVICES

We only use materials provided by companies who offer the very **highest quality**, suitable and certified products. Our success is due to top quality assurance: ISO 9001, SGS, UL, TÜV, ISO 14000 and Ohsas 18001.

CUSTOMIZE TOTALLY YOUR ENCLOSURE

Our production systems can give custom-made solutions **on demand.** Every colour from RAL chart is available to be personalized. A variety of protection standards thanks to our own painting facilities.

EU **100%** *Entirely designed and manufactured in Europe*

CONTACT US

Confidentiality, reliability & quality

www.delvallebox.com
comercial@delvalle.es
+34 945 601 381

ALSO ONLINE

Please contact our technical sales department

A team of professionals with high experience and ability to solve all your queries



ROOF MOUNTED AIR CONDITIONERS IP54

Wide Range of Power with Easy Installation

Example MVAIRT0500A

The range of roof mounted air conditioners (between 500W and 3800W) have been designed to cool electrical enclosures to prevent failure of installed equipment.
The range of roof mounted air conditioners have been designed to cool electrical enclosures to prevent failure of installed equipment. They are quick and easy to install with simple cut-outs and a drilling template supplied with each unit.
Once installed the enclosure can be rated to IP54, which prevents dust entering in sufficient quantities that may cause interference with the installed equipment and prevents damage from splashed water.

Examples MVAIRT2000A, MVAIRT3000A and MVAIRT4000A

FOR MORE INFORMATION CLICK HERE

FUNCTIONING

Operation of the roof air conditioning system

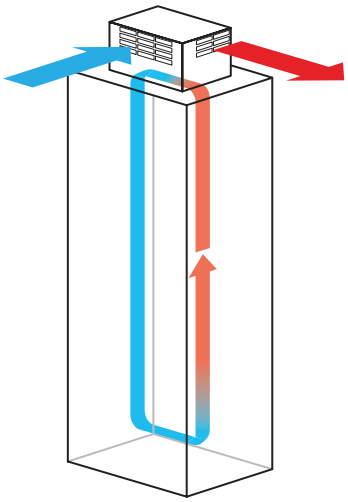

FEATURES

- Available in the 500W – 4000W cooling capacity range.
- They have compact dimensions to enable the most critical installations.
- Designed for high efficiency and low maintenance requirements.
- They feature minimized weight, noise and vibrations.
- IP54 protection rating – more info on IP ratings.
- Easy installation.
- Electronic controller.
- Recommended for indoor use.
- Minimal maintenance.

ROOF MOUNTED AIR CONDITIONERS IP54

MODEL MVAIRT0500A IP54

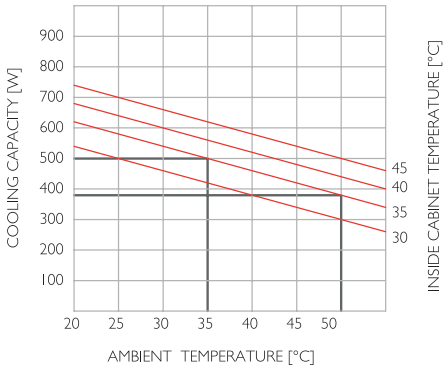

DRILLING TEMPLATE

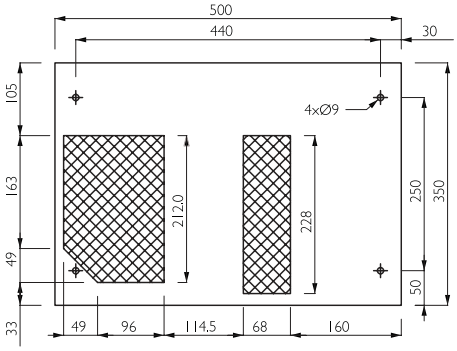

REFERENCE		MVAIRT0500A
POWER SUPPLY (V | ph | Hz)		230 | 1 | 50/60
COOLING CAPACITY (W)	A35 / A35	500 / 520
	A35 / A50	360 / 380
ABSORBED ELECTRIC POWER (W)	A35 / A35	270 /300
	A35 / A50	300 / 350
RATED CURRENT (A)	A35 / A35	2.0 / 2.2
MOTOR CIRCUIT BREAKER / DELAYED PRE FUSE (ADVISED) (A)		6
ELECTRICAL CONNECTION		Three-pole connector
AIR FLOW RATE	enclosure / m³/h	255 / 290
OPERATING TEMPERATURE	ambient / °C	+20 |+55
	enclosure / °C	+20 |+45
REFRIGERANT / CHARGE (- | g)		R134a | 250
PROTECTION DEGREE EN 60529/1	ambient	IP34
	enclosure	IP54 (when installed on enclosu re with the same protection degree)
DESIGN	casing	Galvanised sheet steel
	cover	Galvanised sheet steel powder coated RAL7035
CERTIFICATIONS		CE
DIMENSIONS (mm)		250 (high) x 500 (width) x 350 (depth)

ROOF MOUNTED AIR CONDITIONERS IP54

MODEL MVAIRT1000A - MVAIRT1500A IP54



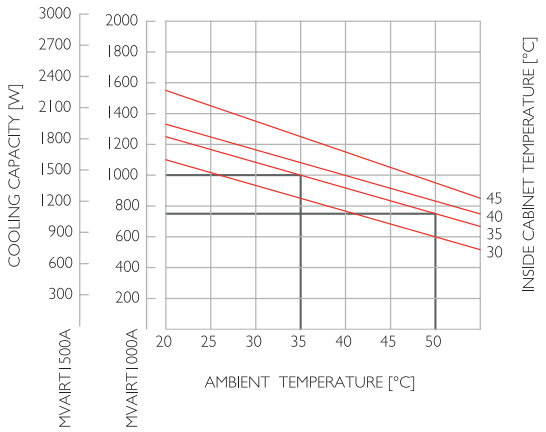

DRILLING TEMPLATE

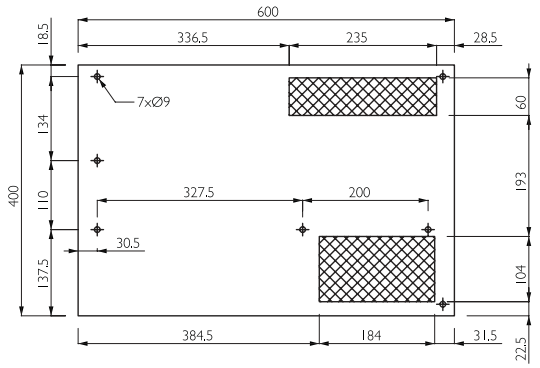

REFERENCES		MVAIRT1000A	MVAIRT1500A
POWER SUPPLY (V | ph | Hz)		230 | 1 | 50/60	
COOLING CAPACITY (W)	A35 / A35	1000 / 1060	1460 / 1520
	A35 / A50	760 / 790	1090 / 1130
ABSORBED ELECTRIC POWER (W)	A35 / A35	780 / 850	870 / 930
	A35 / A50	890 / 970	1050 / 1180
RATED CURRENT (A)	A35 / A35	3.7 / 3.9	4.6 / 4.8
MOTOR CIRCUIT BREAKER / DELAYED PRE FUSE (ADVISED) (A)		10	
ELECTRICAL CONNECTION		Three-pole connector	
AIR FLOW RATE	enclosure / m³/h	600 / 625	
OPERATING TEMPERATURE	ambient / °C	+20 |+55	
	enclosure / °C	+20 |+45	
REFRIGERANT / CHARGE (- | g)		R134a | 250	
PROTECTION DEGREE EN 60529/1	ambient	IP34	
	enclosure	IP54 (when installed on enclosu re with the same protection degree)	
DESIGN	casing	Galvanised sheet steel	
	cover	Galvanised sheet steel powder coated RAL7035	
CERTIFICATIONS		CE	
DIMENSIONS (mm)		300 (high) x 600 (width) x 400 (depth)	

ROOF MOUNTED AIR CONDITIONERS IP54

MODEL MVAIRT2000A IP54

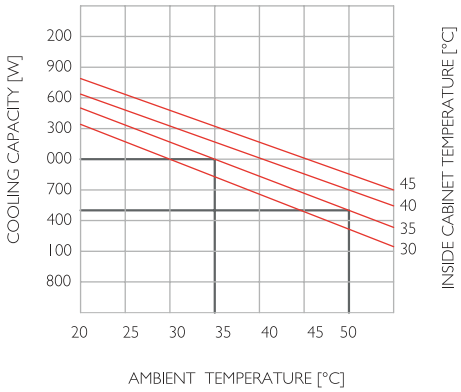

DRILLING TEMPLATE

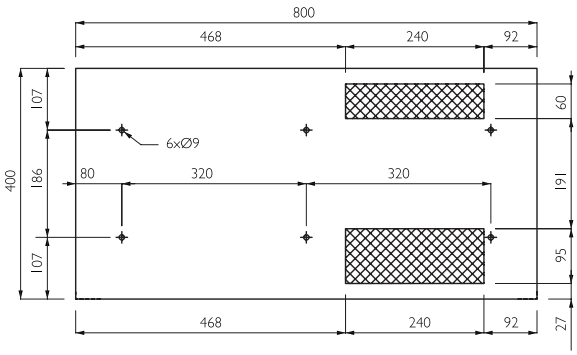

REFERENCE		MVAIRT2000A
POWER SUPPLY (V | ph | Hz)		230 | 1 | 50/60
COOLING CAPACITY (W)	A35 / A35	2000 / 2110
	A35 / A50	1500 / 1570
ABSORBED ELECTRIC POWER (W)	A35 / A35	900 / 1050
	A35 / A50	1100 / 1250
RATED CURRENT (A)	A35 / A35	5.1 / 6.2
MOTOR CIRCUIT BREAKER / DELAYED PRE FUSE (ADVISED) (A)		10
ELECTRICAL CONNECTION		Three-pole connector
AIR FLOW RATE	enclosure / m³/h	860 / 950
OPERATING TEMPERATURE	ambient / °C	+20 |+55
	enclosure / °C	+20 |+45
REFRIGERANT / CHARGE (- | g)		R134a | 250
PROTECTION DEGREE EN 60529/1	ambient	IP34
	enclosure	IP54 (when installed on enclosu re with the same protection degree)
DESIGN	casing	Galvanised sheet steel
	cover	Galvanised sheet steel powder coated RAL7035
CERTIFICATIONS		CE
DIMENSIONS (mm)		400 (high) x 800 (width) x 400 (depth)

ROOF MOUNTED AIR CONDITIONERS IP54

MODEL MVAIRT3000A - MVAIRT4000A IP54

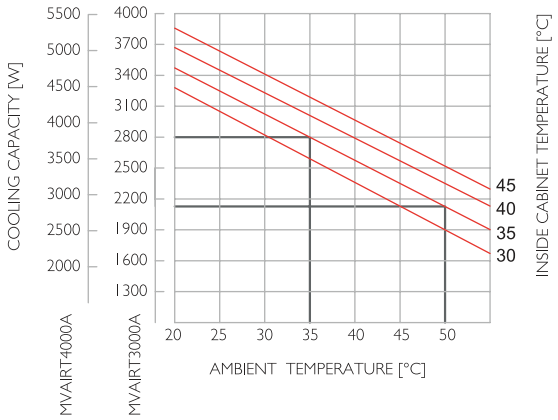

DRILLING TEMPLATE

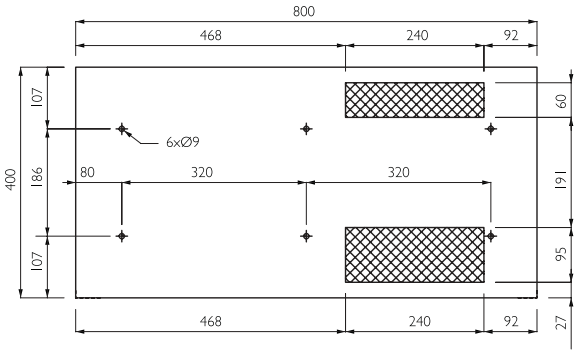

REFERENCES		MVAIRT3000A	MVAIRT4000A
POWER SUPPLY (V | ph | Hz)		400 | 3 | 50 / 460 | 3 | 60	
COOLING CAPACITY (W)	A35 / A35	2800 / 2930	3800 / 3980
	A35 / A50	2110 / 2300	2840 / 3150
ABSORBED ELECTRIC POWER (W)	A35 / A35	1700 / 1810	1900 / 2030
	A35 / A50	2270 / 2390	2450 / 2600
RATED CURRENT (A)	A35 / A35	2.8 / 3.4	4.0 / 4.8
MOTOR CIRCUIT BREAKER / DELAYED PRE FUSE (ADVISED) (A)		16	
ELECTRICAL CONNECTION		Three-pole connector	
AIR FLOW RATE	enclosure / m³/h	860 / 950	
OPERATING TEMPERATURE	ambient / °C	+20 |+55 / +20 |+50	
	enclosure / °C	+20 |+45	
REFRIGERANT / CHARGE (- | g)		R134a | 250	
PROTECTION DEGREE EN 60529/1	ambient	IP34	
	enclosure	IP54 (when installed on enclosu re with the same protection degree)	
DESIGN	casing	Galvanised sheet steel	
	cover	Galvanised sheet steel powder coated RAL7035	
CERTIFICATIONS		CE	
DIMENSIONS (mm)		400 (high) x 800 (width) x 400 (depth)	

FOR MORE INFORMATION CLICK HERE

OTHER ELEMENTS OF VENTILATION AND CLIMATE CONTROL

DELVALLE, EXPERTS IN VENTILATION AND CLIMATE CONTROL

One solution for every need. Our engineers equipment will find the best climate control installation and get a better performance and greater energy and cost savings



AIR CONDITIONERS



THERMOELECTRIC COOLERS

TEMPERATURE CONTROL



FILTER FANS





RESISTANCE HEATERS

FOR MORE INFORMATION CLICK HERE

CUSTOMIZED ENCLOSURE SOLUTIONS DELVALLE

Delvalle has more than 50 years of experience using the latest technology to implement and obtain the most innovative products on offer to all our customers. Delvalle is an ideal partner, combining an advanced and wide range of products at very competitive prices.

The customized manufacture of all electrical enclosures and cabinets Delvallebox is carry out with the most advanced technical methods and with the precision and consciousness of a craftsman. This makes the difference from competitors and is the best way to gain our customers´ trust.
In Delvallebox we bear in mind that customers perceive the quality very clearly. In every product (for instance, in the cabinets here presented) safety and useful solutions are what customers value most.



STAINLESS STEEL INDUSTRIAL ENCLOSURES



OUTDOOR ELECTRICAL ENCLOSURES



GLOBAL ELECTRICAL SOLUTIONS FOR URBAN AREAS



GALVANIZED STEEL ELECTRICAL ENCLOSURES

Phone +34 945 601 381
comercial@delvalle.es | www.delvallebox.com



SLOPED ROOF ENCLOSURES - HYGIENIC

ATEX INDUSTRIAL ENCLOSURES



INDUSTRIAL ENCLOSURES IP66, IP67, IP68 AND IP69K

Buy direct from manufacturer of custom made IP66, IP67, IP68 and IP69K heavy duty industrial and waterproof electrical enclosures AISI 304L and 316L made by standard IEC 60529. Delvalle has tested all sizes and dimensions of waterproof enclosures according to EN 60529:2018. All weather resistant enclosures are more than simply rainproof, they meet a minimum of Nema 4X and IP66, IP67, IP68 and IP69k requirements to ensure your electronics are protected. From Juntion boxes to industrial enclosures, Delvalle weatherproof enclosures offer a wide range of sizes and styles to keep your project waterproof.





CABLE GLANDS FOR ELECTRICAL ENCLOSURES

CLIMATE CONTROL COOLING FOR ENCLOSURES



delvalle®

INDUSTRIAL ENCLOSURE SOLUTIONS





Paso del Prao, 6. 01320 Oyón (Álava). Spain
Phone +34 945 601 381
comercial@delvalle.es | www.delvallebox.com

Contact us, we will be available at any time

CE TÜV Rheinland UL CERTIFIED SAFETY US-CA E342220 greenproduct RoHS WEEE