ECO FRIENDLY PRODUCT

delvalle®

INDUSTRIAL ENCLOSURE SOLUTIONS

comercial@delvalle.es | www.delvallebox.com

PELTIER COOLING FLAT DESIGN IP55



·WE ARE·
MANUFACTURERS
CERTIFIED



WE PUT AT YOUR DISPOSAL

We offer over **50 years** providing solutions to demanding customers who require very specific characteristics and behaviour according to the sector and their needs.

WHEREVER YOU GO

We are committed to working closely with our customers, providing them with **exceptional service** and offering an advanced and extensive range of products with very competitive prices.

HIGH STANDARD OF QUALITY AND SERVICES

We only use materials provided by companies who offer the very **highest quality**, suitable and certified products. Our success is due to top quality assurance: ISO 9001, SGS, UL, TÜV, ISO 14000 and Ohsas 18001.

CUSTOMIZE TOTALLY YOUR ENCLOSURE

Our production systems can give custom-made solutions **on demand.** Every colour from RAL chart is available to be personalized. A variety of protection standards thanks to our own painting facilities.

EU **100%** *Entirely designed and manufactured in Europe*

CONTACT US

Confidentiality, reliability & quality

www.delvallebox.com
comercial@delvalle.es
+34 945 601 381

ALSO ONLINE

Please contact our technical sales department

A team of professionals with high experience and ability to solve all your queries



PELTIER COOLING FLAT DESIGN IP55



Example of peltier cooling mounted on enclosure

Respectful with the Environment

Peltier cooler IP55 compact, high performance and low power consumption, made of stainless steel, slim design ideal for thermoelectric cooling in cabinets and boxes of electronics. The most reliable cooling system with no maintenance. The Peltier cooling flat design Delvalle offers their customers may be supplied in different variants 50W or 100W. The warm side (outside) is designed in IP55 degree of protection. The integral overheat control with alarm switch allows safe operation even under harsh ambient conditions.
Due to its design the thermoelectric cooler is free from any liquids so that the risk of leakage does not exist. Moreover, the latest Peltier technology makes it possible to install and operate the cooler in any desired position.

FOR MORE INFORMATION CLICK HERE

APPLICATIONS

Specially designed for cabinets placed in areas where is necessary a uniform temperature inside the cabinet, PLC'S, external computers, robots, electronic circuits sensitive to temperature changes,...



PELTIER COOLING FLAT DESIGN IP55

FEATURES

- This objective was achieved by use of radial fans and high performance heat sinks and aptimized air flow.
- Enclosure cooling with Peltier technology.
- Extension and installation without additional accessories.
- Robust stainless-steel housing.
- Elegant flat design.
- Separate internal and external circulation.
- High-performance heatsinks.
- Optimized airflow.
- Directional cold air flow.
- Heating or cooling operation.
- Plug-in terminal.
- Due to the robust housing made of polished stainless steel, the devices are suitable for a variety of industrial applications.
- The two piece design of the housing allows either surface mounting or semi-recessed.
- The inner radial fan sucks warm air from the top of the cabinet.
- A directed stream of cold air is blown through the bottom opening in the cabinet.
- Due to the large distance between air intake and outlet a good air circulation is achieved.
- An absorber fleece in the exhaust port is used to collect condensate.



Surface mounting



Semi recessed mounting

FUNCTIONING

Depending on the peltier cooling flat units, it has different types of operation.

Operation of model HTEC050E

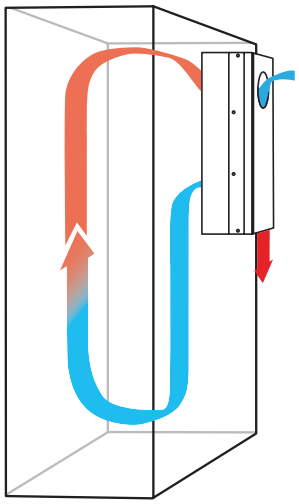

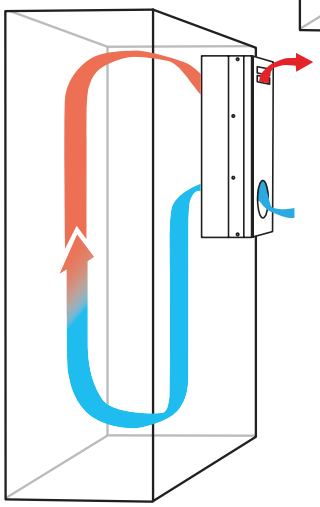

Operation of model HTEC100E

NORMATIVES

- IP55 Norm EN 60529.
- Built to CE low voltage.
- Electronic compatibility to EN 300386 and EN 55022.

Phone +34 945 601 381
comercial@delvalle.es | www.delvallebox.com

PELTIER COOLING FLAT DESIGN IP55

MODEL HTEC050E IP55

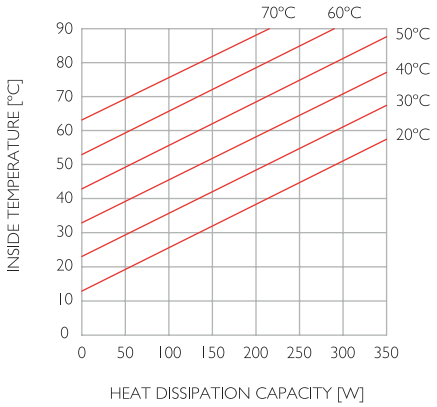

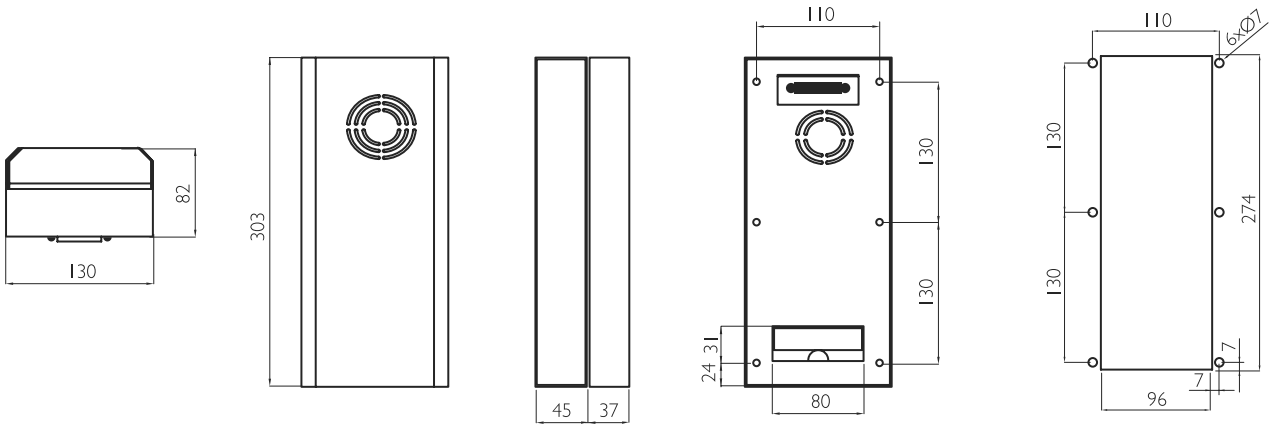

REFERENCE	HTEC050E
OPERATING VOLTAGE	24 V DC
INPUT VOLTAGE RANGE	18 - 26 V DC
AMPERAGE	3,7 A
STARTING CURRENT	8,5 A
FUSE	10 A (T)
COOLING CAPACITY AT Δ^T = 0 KELVIN	50 W
HEATHING CAPACITY	100 W
NOMINAL POWER	89 W
SOUND PRESURE	63 dB(A) @1m
AIR VOLUME FLOW	20 m³/h
DEGREE OF PROTECTION OUTSIDE / INSIDE	IP55 / IP20
OPERATING TEMPERATURE	-20 °C … +60 °C

PELTIER COOLING FLAT DESIGN IP55

MODEL HTEC100E IP55

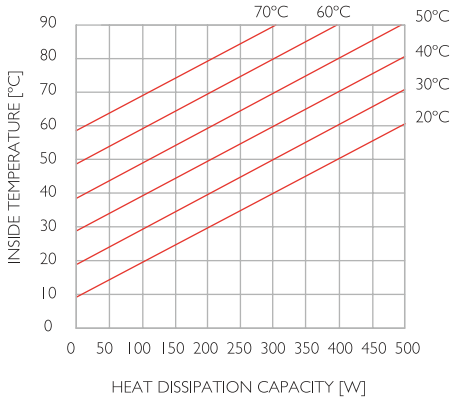

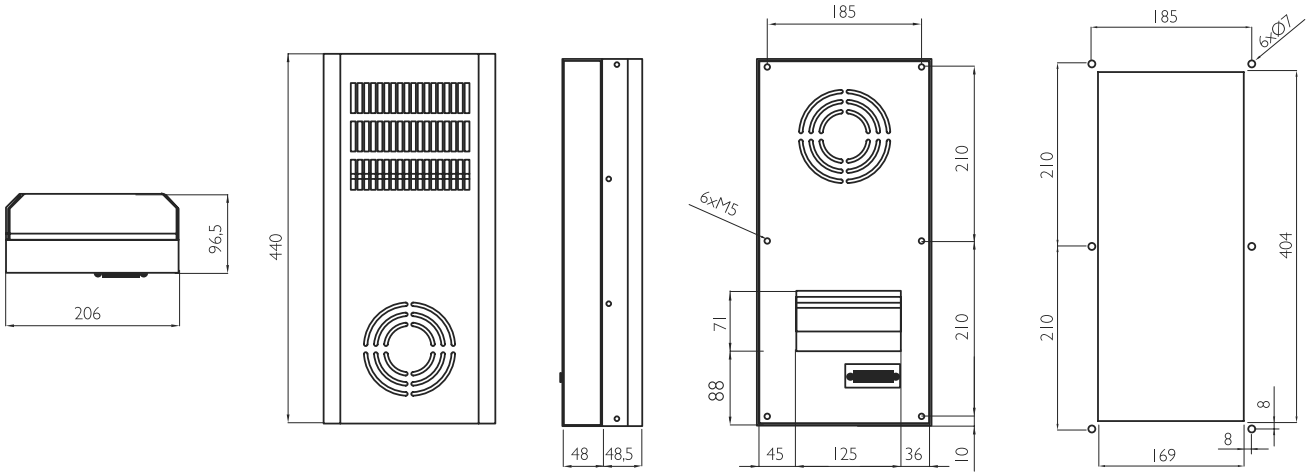

REFERENCE	HTEC100E
OPERATING VOLTAGE	24 V DC
INPUT VOLTAGE RANGE	16 - 28 V DC
AMPERAGE	6,5 A
STARTING CURRENT	8,5 A
FUSE	10 A (T)
COOLING CAPACITY AT Δ^T = 0 KELVIN	100 W
HEATHING CAPACITY	180 W
NOMINAL POWER	156 W
SOUND PRESURE	72 dB(A) @1m
AIR VOLUME FLOW	120 m³/h
DEGREE OF PROTECTION OUTSIDE / INSIDE	IP55 / IP20
OPERATING TEMPERATURE	-25 °C … +55 °C

FOR MORE INFORMATION CLICK HERE

OTHER ELEMENTS OF VENTILATION AND CLIMATE CONTROL

DELVALLE, EXPERTS IN VENTILATION AND CLIMATE CONTROL

One solution for every need. Our engineers equipment will find the best climate control installation and get a better performance and greater energy and cost savings



AIR CONDITIONERS



THERMOELECTRIC COOLERS

TEMPERATURE CONTROL



FILTER FANS





RESISTANCE HEATERS

FOR MORE INFORMATION CLICK HERE

CUSTOMIZED ENCLOSURE SOLUTIONS DELVALLE

Delvalle has more than 50 years of experience using the latest technology to implement and obtain the most innovative products on offer to all our customers. Delvalle is an ideal partner, combining an advanced and wide range of products at very competitive prices.

The customized manufacture of all electrical enclosures and cabinets Delvallebox is carry out with the most advanced technical methods and with the precision and consciousness of a craftsman. This makes the difference from competitors and is the best way to gain our customers´ trust.
In Delvallebox we bear in mind that customers perceive the quality very clearly. In every product (for instance, in the cabinets here presented) safety and useful solutions are what customers value most.



STAINLESS STEEL INDUSTRIAL ENCLOSURES



OUTDOOR ELECTRICAL ENCLOSURES



GLOBAL ELECTRICAL SOLUTIONS FOR URBAN AREAS



GALVANIZED STEEL ELECTRICAL ENCLOSURES

Phone +34 945 601 381
comercial@delvalle.es | www.delvallebox.com



SLOPED ROOF ENCLOSURES - HYGIENIC

ATEX INDUSTRIAL ENCLOSURES



INDUSTRIAL ENCLOSURES IP66, IP67, IP68 AND IP69K

Buy direct from manufacturer of custom made IP66, IP67, IP68 and IP69K heavy duty industrial and waterproof electrical enclosures AISI 304L and 316L made by standard IEC 60529. Delvalle has tested all sizes and dimensions of waterproof enclosures according to EN 60529:2018. All weather resistant enclosures are more than simply rainproof, they meet a minimum of Nema 4X and IP66, IP67, IP68 and IP69k requirements to ensure your electronics are protected. From Juntion boxes to industrial enclosures, Delvalle weatherproof enclosures offer a wide range of sizes and styles to keep your project waterproof.





CABLE GLANDS FOR ELECTRICAL ENCLOSURES

CLIMATE CONTROL COOLING FOR ENCLOSURES



delvalle®

INDUSTRIAL ENCLOSURE SOLUTIONS





Paso del Prao, 6. 01320 Oyón (Álava). Spain
Phone +34 945 601 381
comercial@delvalle.es | www.delvallebox.com

Contact us, we will be available at any time

CE TÜV Rheinland UL CERTIFIED SAFETY US-CA E342220 greenproduct RoHS WEEE