delvalle®

Enclosures & Cabinets for Special Requirements

NEMA TYPE 1-3R-4X-12 ELECTRICAL ENCLOSURES





UL

NEMA

1 - 3R - 4X - 12

comercial@delvalle.es | www.delvallebox.com

NEMA ELECTRICAL ENCLOSURES TYPE 1-3R-4X-12 2
NEMA ELECTRICAL ENCLOSURES TYPE 1-3R-4X-12 UL 2
GLOBAL ELECTRICAL SOLUTIONS FOR URBAN AREAS 5

STAINLESS STEEL ELECTRICAL ENCLOSURES 6
WALL MOUNTED ENCLOSURES - LUXOR IP66 7
FREE-STANDING ENCLOSURE - TRIBECA IP66 11
MODULAR ENCLOSURE - TITAN IP66 15
PUSH-BUTTON AND JUNCTION BOX - GEO IP66 19
PANORAMIC WALL MOUNTED - LUXOR TEDEO IP66 22
NEMA ENCLOSURES WITH DISCONNECT SWITCHES 25
STAINLESS STEEL SEISMIC ELECTRICAL ENCLOSURE IP66 29
ANTI-DUST SYSTEM FOR ENCLOSURES - DUSTY 32
ELECTRICAL ENCLOSURES SUNBOX - LUXOR IP66 34
STAINLESS STEEL FIRE EXTINGUISHER ENCLOSURE IP66 36

OUTDOOR HEAVY DUTY ELECTRICAL ENCLOSURES 39
OUTDOOR TELECOM 19 RACK - STORM IP66 40
OUTDOOR ENCLOSURES - DESERT IP66 45
RACK WITH DOUBLE WALL - TORNADO IP66 53
OUTDOOR ENCLOSURE - TROPICO IP66 60
STAINLESS STEEL SOS POST IP66 66
ANTI-POSTER OUTDOOR ENCLOSURE IP66 69

GALVANIZED STEEL ELECTRICAL ENCLOSURES 70
PAINTED WALL CABINET - LUXOR IP66 71
FREESTANDING ENCLOSURE - TRIBECA IP66 74
MODULAR PAINTED ENCLOSURE - TITAN IP66 77
PAINTED JUNCTION BOXES - GEO IP66 81
PAINTED OUTDOOR ENCLOSURE - TROPICO IP66 83
RACK WITH DOUBLE WALL - TORNADO IP66 86
PAINTED OUTDOOR RACK - STORM IP66 89

ALUMINIUM ELECTRICAL ENCLOSURES 92
ELECTRICAL MOUNTED ENCLOSURES - LUXOR IP66 93
ALUMINIUM PUSH-BUTTON BOXES - GEO IP66 96
FREE-STANDING ENCLOSURE - TRIBECA IP66 99
OUTDOOR RACK DOUBLE WALL - TORNADO IP66 102

HYGIENIC DESIGN ENCLOSURES 106
JUCTION BOX - FRESH GEO IP66 107
ELECTRICAL ENCLOSURES - FRESH TRIBECA IP66 109
ELECTRICAL ENCLOSURE - FRESH LUXOR IP66 112
ELECTRICAL ENCLOSURE - HYGIENIC LUXOR IP66 114
JUCTION BOX - HYGIENIC GEO IP66 117
ELECTRICAL ENCLOSURE - HYGIENIC TRIBECA IP66 119

MODULAR DISTRIBUTION ENCLOSURES 122
MODULAR DISTRIBUTION WALL CABINETS - TITAN IP66 123
MODULAR DISTRIBUTION WALL CABINETS - TRIBECA IP66 126
MODULAR DISTRIBUTION WALL CABINETS - LUXOR IP66 129

CLIMATE CONTROL COOLING FOR ENCLOSURES 132
FILTER FANS - PRIUS IP54-55 133
STAINLESS STEEL THERMOELECTRIC COOLER IP67 135
ROOF FAN - VIPER IP44-54 137
UL RESISTANCE HEATERS - MAX 139
THERMOSTATS AND THERMO-HYGROSTATS 141
VENT DRAINS FOR THERMOELECTRIC COOLERS IP66 142

delvalle®
Paso del Prao, 6 - 01320 Oyón (Álava) Spain
Telf. +34 945 601 381
comercial@delvalle.es | www.delvallebox.com



WE PUT AT YOUR DISPOSAL

We offer over **45 years** providing solutions to demanding customers who require very specific characteristics and behaviour according to the sector and their needs.

WHEREVER YOU GO

We are committed to working closely with our customers, providing them with **exceptional service** and offering an advanced and extensive range of products with very competitive prices.

HIGH STANDARD OF QUALITY AND SERVICES

We only use materials provided by companies who offer the very **highest quality**, suitable and certified products. Our success is due to top quality assurance: ISO 9001, SGS, UL, TÜV, ISO 14000 and Ohsas 18001.

CUSTOMIZE TOTALLY YOUR ENCLOSURE

Our production systems can give custom-made solutions **on demand.** Every colour from RAL chart is available to be personalized. A variety of protection standards thanks to our own painting facilities.

CONTACT US

Confidentiality, reliability & quality

www.delvallebox.com
comercial@delvalle.es
+34 945 601 381

ALSO ONLINE

Please contact our technical sales department

A team of professionals with high experience and ability to solve all your queries



NEMA ELECTRICAL ENCLOSURES TYPE 1-3R-4X-12

In the process to get Nema 4x certification (the most demanding of all standards) our enclosures from the families Luxor, Tribeca, Titan and Geo have undergone the most rigorous tests

Our standard Nema enclosures are available in wall-mount, free standing, floor mount, junction box and trough types, depending on what fits your needs best.

All electrical Nema enclosures are manufactured in compliance with Nema standards; are UL listed, and/or IP rated.

Nema electrical Enclosures adhere to strict Nema Enclosures Quality Standards to ensure product performance and reliability.

Contact us or order online today to see how we can expedite custom made Nema enclosures and produce cost-effective safety rated standard enclosures to protect you and your equipment.



Delvalle is the first and the only European manufacturer whose big-size stainless steel Nema rated enclosures and cabinets (up to 3000mm wide, three doors) and boxes are all Nema 4X certified. Mild steel enclosures are Nema 1, 3R, 12, 4 certified.
We manufacture custom cabinets UL to 3 meter wide, 2 meter high and 1 meter deep. In the process to get Nema 4x certification (the most demanding of all standards) our enclosures from the families Luxor, Tribeca, Titan and Geo have undergone the most rigorous tests. This means that our cabinets guarantee protection against dirt, rain, sleet, snow, dust carried by wind, splashing water and corrosive substances. They also prevent the external formation of ice, offering extra safety to users who interact with the enclosures. Not only our enclosures, but also our refrigeration and air conditioning systems are UL certified. This way we offer a global solution which meets high standards and technical requirements while, at the same time securing a stable, homogenous temperature inside the enclosure.

NEMA ENCLOSURES TYPES 1-3R-4X-12 UNDER NORMATIVE UL	
TYPE	DESCRIPTION
Nema Enclosures Types 1	Enclosures constructed for indoor use to provide a degree of protection to personnel against access to hazardous parts and to provide a degree of protection of the equipment inside the enclosure against ingress of solid foreign objects (falling dirt)
Nema Enclosures Types 2	Enclosures constructed for indoor use to provide a degree of protection to personnel against access to hazardous parts; to provide a degree of protection of the equipment inside the enclosure against ingress of solid foreign objects (falling dirt); and to provide a degree of protection with respect to harmful effects on the equipment due to the ingress of water (dripping and light splashing)
Nema Enclosures Types 3	Enclosures constructed for either indoor or outdoor use to provide a degree of protection to personnel against access to hazardous parts; to provide a degree of protection of the equipment inside the enclosure against ingress of solid foreign objects (falling dirt and windblown dust); to provide a degree of protection with respect to harmful effects on the equipment due to the ingress of water (rain, sleet, snow); and that will be undamaged by the external formation of ice on the enclosure
Nema Enclosures Types 3R	Enclosures constructed for either indoor or outdoor use to provide a degree of protection to personnel against access to hazardous parts; to provide a degree of protection of the equipment inside the enclosure against ingress of solid foreign objects (falling dirt); to provide a degree of protection with respect to harmful effects on the equipment due to the ingress of water (rain, sleet, snow); and that will be undamaged by the external formation of ice on the enclosure
Nema Enclosures Types 3S	Enclosures constructed for either indoor or outdoor use to provide a degree of protection to personnel against access to hazardous parts; to provide a degree of protection of the equipment inside the enclosure against ingress of solid foreign objects (falling dirt and windblown dust); to provide a degree of protection with respect to harmful effects on the equipment due to the ingress of water (rain, sleet, snow); and for which the external mechanism(s) remain operable when ice laden
Nema Enclosures Types 3X	Enclosures constructed for either indoor or outdoor use to provide a degree of protection to personnel against access to hazardous parts; to provide a degree of protection of the equipment inside the enclosure against ingress of solid foreign objects (falling dirt and windblown dust); to provide a degree of protection with respect to harmful effects on the equipment due to the ingress of water (rain, sleet, snow); that provides an Additional level of protection against corrosion and that will be undamaged by the external formation of ice on the enclosure
Nema Enclosures Types 3RX	Enclosures constructed for either indoor or outdoor use to provide a degree of protection to personnel against access to hazardous parts; to provide a degree of protection of the equipment inside the enclosure against ingress of solid foreign objects (falling dirt); to provide a degree of protection with respect to harmful effects on the equipment due to the ingress of water (rain, sleet, snow); that will be undamaged by the external formation of ice on the enclosure that provides an Additional level of protection against corrosion; and that will be undamaged by the external formation of ice on the enclosure
Nema Enclosures Types 3SX	Enclosures constructed for either indoor or outdoor use to provide a degree of protection to personnel against access to hazardous parts; to provide a degree of protection of the equipment inside the enclosure against ingress of solid foreign objects (falling dirt and windblown dust); to provide a degree of protection with respect to harmful effects on the equipment due to the ingress of water (rain, sleet, snow); that provides an Additional level of protection against corrosion; and for which the external mechanism(s) remain operable when ice laden
Nema Enclosures Types 4	Enclosures constructed for either indoor or outdoor use to provide a degree of protection to personnel against access to hazardous parts; to provide a degree of protection of the equipment inside the enclosure against ingress of solid foreign objects (falling dirt and windblown dust); to provide a degree of protection with respect to harmful effects on the equipment due to the ingress of water (rain, sleet, snow, splashing water, and hose directed water); and that will be undamaged by the external formation of ice on the enclosure
Nema Enclosures Types 4X	Enclosures constructed for either indoor or outdoor use to provide a degree of protection to personnel against access to hazardous parts; to provide a degree of protection of the equipment inside the enclosure against ingress of solid foreign objects (windblown dust); to provide a degree of protection with respect to harmful effects on the equipment due to the ingress of water (rain, sleet, snow, splashing water, and hose directed water); that provides an Additional level of protection against corrosion; and that will be undamaged by the external formation of ice on the enclosure
Nema Enclosures Types 5	Enclosures constructed for indoor use to provide a degree of protection to personnel against access to hazardous parts; to provide a degree of protection of the equipment inside the enclosure against ingress of solid foreign objects (falling dirt and settling airborne dust, lint, fibers, and flyings); and to provide a degree of protection with respect to harmful effects on the equipment due to the ingress of water (dripping and ight splashing)
Nema Enclosures Types 6	Enclosures constructed for either indoor or outdoor use to provide a degree of protection to personnel against access to hazardous parts; to provide a degree of protection of the equipment inside the enclosure against ingress of solid foreign objects (falling dirt); to provide a degree of protection with respect to harmful effects on the equipment due to the ingress of water (hose directed water and the entry of water during occasional temporary submersion at a limited depth); and that will be undamaged by the external formation of ice on the enclosure
Nema Enclosures Types 6P	Enclosures constructed for either indoor or outdoor use to provide a degree of protection to personnel against access to hazardous parts; to provide a degree of protection of the equipment inside the enclosure against ingress of solid foreign objects (falling dirt); to provide a degree of protection with respect to harmful effects on the equipment due to the ingress of water (hose directed water and the entry of water during prolonged submersion at a limited depth); that provides an Additional level of protection against corrosion and that will be undamaged by the external formation of ice on the enclosure
Nema Enclosures Types 12	Enclosures constructed (without knockouts) for indoor use to provide a degree of protection to personnel against access to hazardous parts; to provide a degree of protection of the equipment inside the enclosure against ingress of solid foreign objects (falling dirt and circulating dust, lint, fibers, and flyings); and to provide a degree of protection with respect to harmful effects on the equipment due to the ingress of water (dripping and light splashing)
Nema Enclosures Types 12K	Enclosures constructed (with knockouts) for indoor use to provide a degree of protection to personnel against access to hazardous parts; to provide a degree of protection of the equipment inside the enclosure against ingress of solid foreign objects (falling dirt and circulating dust, lint, fibers, and flyings); and to provide a degree of protection with respect to harmful effects on the equipment due to the ingress of water (dripping and light splashing)
Nema Enclosures Types 13	Enclosures constructed for indoor use to provide a degree of protection to personnel against access to hazardous parts; to provide a degree of protection of the equipment inside the enclosure against ingress of solid foreign objects (falling dirt and circulating dust, lint, fibers, and flyings); to provide a degree of protection with respect to harmful effects on the equipment due to the ingress of water (dripping and light splashing); and to provide a degree of protection against the spraying, splashing, and seepage of oil and non-corrosive coolants

Phone +34 945 601 381
comercial@delvalle.es | www.delvallebox.com

Investments in R + D + I and the will to achieve continuous improvement in solutions that anticipate the needs of the different markets in which we are present is the force that pushes us and distances us from our competitors when facing the future .

This vital energy is present throughout the organization and pushes us to offer constant updates to our customers. This is one of our main competitive differences and the advantage with which we compete in international markets with a global solution vocation.

UL NEMA ENCLOSURES SERIES

Besides the enclosures and refrigeration systems described, other products by Delvalle also which meet UL standards: cabinets and boxes made in stainless steel, galvanized steel and aluminum; air conditioning and ventilation systems; and several accessories.


CERTIFICATE OF COMPLIANCE

APPLICATIONS OF UL SERIES

The UL standard is demanded in those sectors with the highest levels of safety and protection. Widely present in the chemical and solar energy industreis, where elements must be totally isolated from outside conditions to ensure their correct performance.

If enclosures are to be used in America, then the UL standard becomes a strategic requirement since it is the most widely recognized certification in that most harsh and demanding continent.

We provide you in this table with a list of all the references of cabinets, boxes, ventilation and air conditioning systems and UL accessories:

ENCLOSURES ELECTRICAL NEMA TYPE 1-3R-4X-12 UNDER NORMATIVE UL
MODEL
Stainless Steel Wall Enclosure IP66 Luxor Series
Stainless Steel Free-Standing Enclosure IP65-66 Tribeca Series
Stainless Steel Modular Distribution Cabinets Titan Series IP65
Nema Enclosures With Disconnect Switches
Junction Boxes Geo Series IP66
Panoramic Wall Mounted Stainless Steel Enclosure IP66 Luxor Tedeo Series
Electrical Enclosures For Renewable Energies Sunbox Luxor Series IP66
Stainless Steel Seismic Electrical Enclosure Tribeca Series IP66
Electrical Wall Enclosure Luxor Fresh Series IP66
Enclosure Tribeca Fresh Series IP66
Anti-Dust System for Electrical Enclosures Dusty Series
Aluminium Wall Enclosure IP66 Luxor Series
Aluminium Free-Standing Enclosure Tribeca Series IP6
Push-Button and Junction Aluminium Boxes Geo Series IP66

VENTILATION AND CLIMATITATION NEMA TYPE 1-3R-4X-12
MODEL
Stainless Steel Thermoelectric Cooler IP67
Stainless Steel Thermoelectric Cooler Cooling + Heating IP67
Filter Fans IP55 Prius Series
Filter Fans Stainless Steel IP55 Prius Series
Termoelectric Cooling Unit IP55
Roof Fan Viper Series IP54
Resistance Heaters Nema UL for Enclosures Max Series

GLOBAL ELECTRICAL SOLUTIONS FOR URBAN AREAS

URBAN EQUIPMENTS - SMART CITY

Our outdoor enclosures are ideal for use as part of urban furniture. They are specially designed against vandalism, are guaranteed against corrosion, fulfil new regulations and have an elegant design

We can make internal separations. These are the ideal substitute for concrete enclosures. Openings can be used for the positioning of key locks for electricity or gas companies



IP TELECOMMUNICATIONS

Cabinet with or without 19" or 21" rack system, especially designed for outdoor use: thermoinsulated and self-cooling double wall for better protection of the electronics, servers, CCTV, telecommunications, voice, data, fibre optics,...

ELECTRICITY COMPANIES

We make special electrical enclosures and switchboards for electricity companies such as Iberdrola, Endesa, Hidrocantabrico, Enel, Gas Natural, Naturgas and Red Eléctrica.

LIGHTING

Our enclosures and boxes are capable of withstanding very high electrical and mechanical stresses.



TRAFFIC CONTROL

Ideal for placement on roads or interurban roads, either for signaling or lighting, as well as its use in weather stations outdoors, telecommunications, telephony, fiber optic, video surveillance in urban or interurban areas.

Phone +34 945 601 381
comercial@delvalle.es | www.delvallebox.com

STAINLESS STEEL ELECTRICAL ENCLOSURES

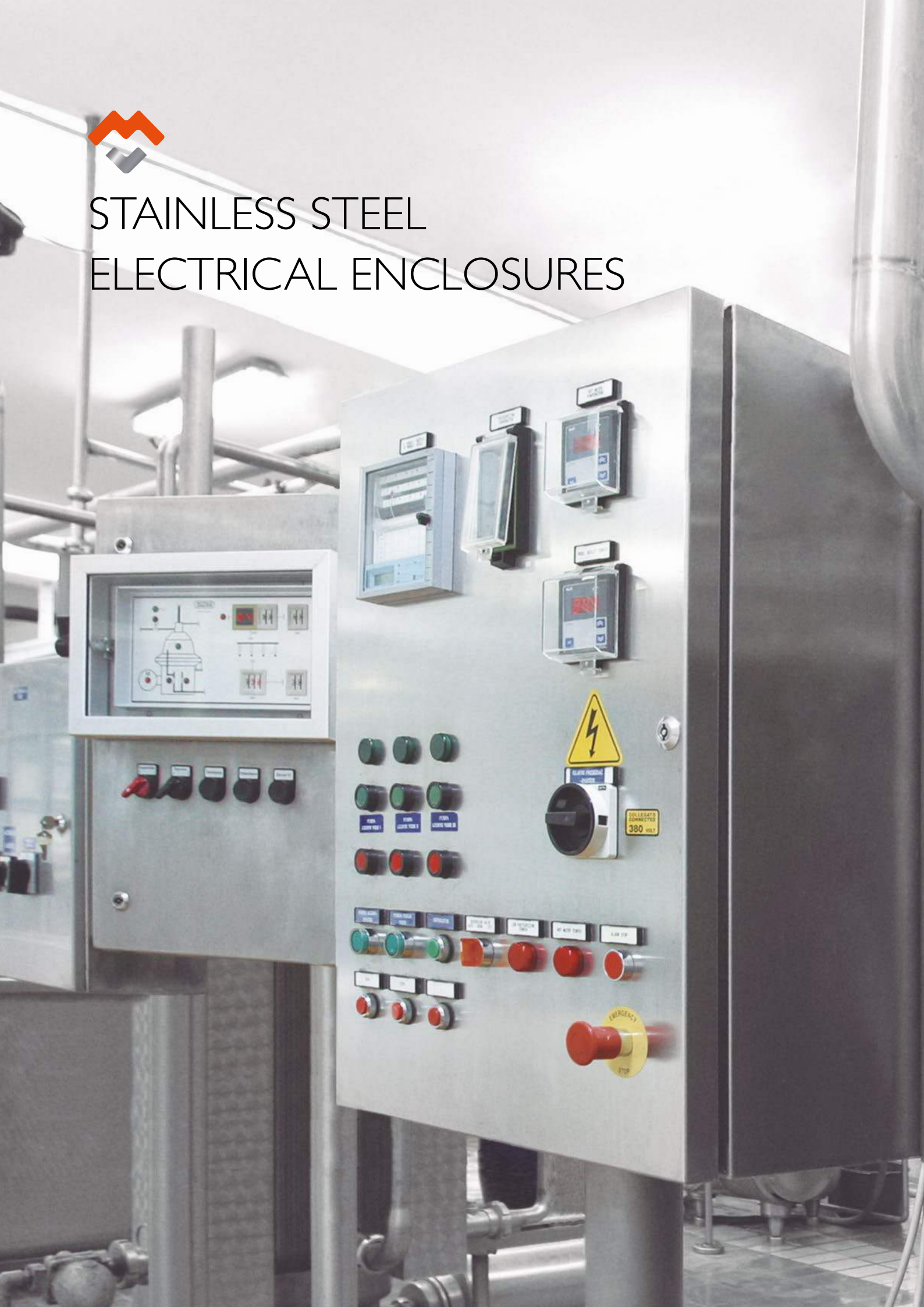

STAINLESS STEEL WALL MOUNTED ENCLOSURES
LUXOR SERIES IP66



Example

Maximum Working Width for your Assemblies

Electrical enclosures Luxor Series with improved design and materials used of locks, easy to open, smoothly turning and opening, flexibility, maximum opening of the doors (up to 120 °), maximum working width for your assemblies, easily removable, unique performance with cutting-edge polished surface finish.
All tests necessary to ensure safety in their electrical installations. Furthermore, each component has exceeded several tests under extreme conditions guaranteeing a long life in electrical assembly.

FOR MORE INFORMATION CLICK HERE



STAINLESS STEEL WALL MOUNTED ENCLOSURES **LUXOR SERIES** IP66



Available opening with 3-locking point handle



APPLICATIONS

- Specially designed for automatic meter positioning, machine controls, and offering, where necessary, a smart look, high quality and durability.
- Electrical control panel approved for food, chemical and pharmaceutical industries, processing plants, telecommunication centers and outdoor use because of its high durability and chemical product resistance.

ADVANTAGES

- Supplied protective film wrapped to prevent scratches and abrasions during handling.
- The manufacture of the stainless steel monobloc gives 100% sealing and maximum resistance.
- With flushing channel that avoids any contact with liquids, polyurethane joints and hidden hinges.
- The standard control panel comes with stainless steel double-bit locking handles.
- Delvalle supplies any measurements required including custom built holes and cut outs both for the door and enclosure.
- Up to IP67 or IP69K.

OPTIONS

- Custom made based on your needs.
- IP67 IEC EN 62208 and EN 60529.
- Up to IP69K -DIN 40050-9.
- Option painted galvanized steel finish in RAL 7035 or another color.
- Possibility of two doors (from 800x600).
- 170° hinge that allows maximum opening for easy access to the cabinet without removing the door.
- Plinths at base.
- Metal legs.
- Wall support (not included in the standard model).
- Transparent polycarbonate door or transparent safety glass door (no IP69K).
- Manufactured in stainless steel AISI 316L EN 14404.
- Mounting plate insulation (bakelite) or stainless steel.
- EMC version according to 2014/30/UE of electromagnetic compatibility.
- Available opening with 3-locking point handle.

STAINLESS STEEL WALL MOUNTED ENCLOSURES LUXOR SERIES IP66



NORMS

- IP66 (W) (IP55 double door without mounting, IP66 with central welded bar mounting) Norm IEC EN 62208 and EN 60529.
- DIN EN ISO 14159 Machine safety – hygiene requirements pertaining to the design of machinery.
- Machinery Directive 2006/42/EC. Food machinery and cosmetic or pharmaceutic production.
- EHEDG Guideline Hygienic Design doc.13 machinery for open processes.
- DIN EN 1672-2:2006 for food industry machinery.
- Maximum IK10 resistance Norm IEC 62208 and IEC 62262.
- Maximum voltage 1000 V.
- Manufactured following EU low voltage ruling 2014/35/UE.
- Materials intended to come into contact with food EC 1935/2004.
- RoHs compliant.
- UL approval Nema 4x, 12, 3r y1 (by request). N° File E342220.

PLAN

CLICK HERE TO DOWNLOAD
THE FILES CAD - PLANS - CERTIFICATES

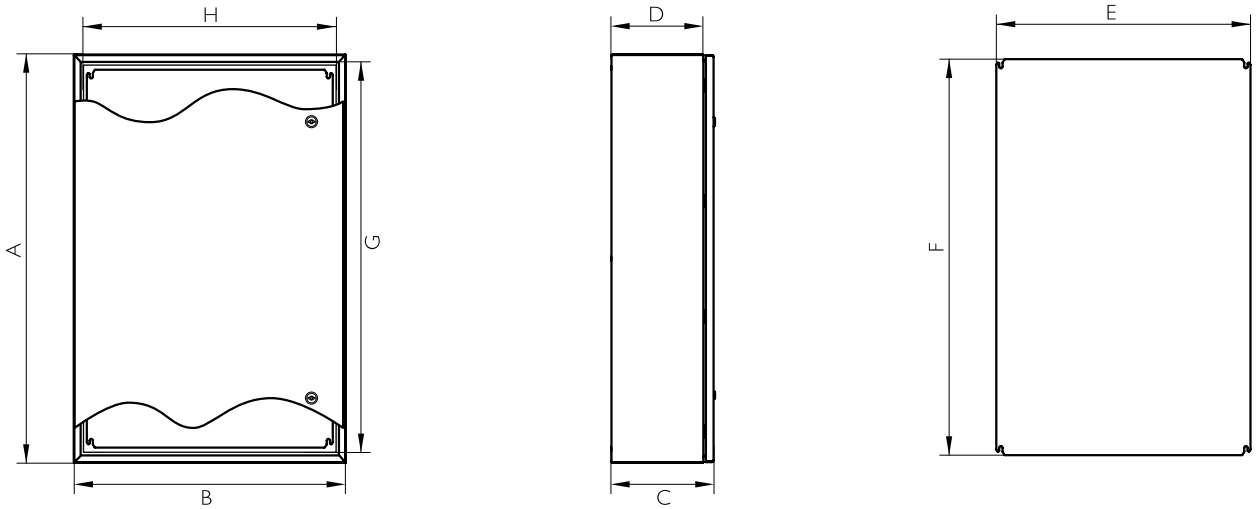

STAINLESS STEEL WALL MOUNTED ENCLOSURES LUXOR SERIES IP66

REFERENCES 1 DOOR

REFERENCES			DIMENSIONS (mm)									
BLIND DOOR	POLYCARBONATE DOOR (no IP69K)	POLYCARBONATE DOOR + INSIDE DOOR (no IP69K)	HEIGHT -A-	WIDTH -B-	DEPTH -C-	ACCESS -GxH-	INSIDE DEPTH -D-	MACHINABLE AREA		PLATE MEASUREMENT -FxE-	WEIGHT (Kg)	VOLUME (m^3)
								DOOR	SIDE			
MVAB302015	MVAB302015T	MVAB302015TC	300	200	155	260x153	125	220x76	270x125	264x147	4,65	0,01
MVAB383015	MVAB383015T	MVAB383015TC	380	300	155	340x253	125	300x176	350x125	344x247	7,68	0,02
MVAB383021	MVAB383021T	MVAB383021TC	380	300	210	340x253	180	300x176	350x180	344x247	8,57	0,03
MVAB404021	MVAB404021T	MVAB404021TC	400	400	210	360x353	180	320x276	370x180	364x347	11,12	0,04
MVAB504021	MVAB504021T	MVAB504021TC	500	400	210	460x353	180	420x276	470x180	464x347	13,51	0,05
MVAB505021	MVAB505021T	MVAB505021TC	500	500	210	460x453	180	420x376	470x180	464x447	16,2	0,06
MVAB705021	MVAB705021T	MVAB705021TC	700	500	210	660x453	180	620x376	670x180	664x447	21,55	0,08
MVAB604021	MVAB604021T	MVAB604021TC	600	400	210	560x353	180	520x276	570x180	564x347	15,74	0,06
MVAB605021	MVAB605021T	MVAB605021TC	600	500	210	560x453	180	520x376	570x180	564x447	18,88	0,07
MVAB606021	MVAB606021T	MVAB606021TC	600	600	210	560x553	180	520x476	570x180	564x547	22	0,08
MVAB806030	MVAB806030T	MVAB806030TC	800	600	300	760x553	270	720x476	770x270	764x547	31,35	0,16
MVAB808030	MVAB808030T	MVAB808030TC	800	800	300	760x753	270	720x676	770x270	764x747	41,5	0,21
MVAB108030	MVAB108030T	MVAB108030TC	1000	800	300	960x753	270	920x676	970x270	964x747	50,69	0,26
MVAB128030	MVAB128030T	MVAB128030TC	1200	800	300	1160x753	270	1120x676	1170x270	1164x747	59,47	0,31
MVAB101030	MVAB101030T	MVAB101030TC	1000	1000	300	960x953	270	920x876	970x270	964x947	61,17	0,32
*MVAC121030	MVAC121030T	MVAC121030TC	1200	1000	300	1090x890	275	1000x790	1170x265	1070x870	78.82	0,46
*MVAC101230	MVAC101230T	MVAC101230TC	1000	1200	300	890x1090	275	800x990	970x265	870x1070	78,76	0,39
*MVAC121230	MVAC121230T	MVAC121230TC	1200	1200	300	1000x1000	275	1000x990	1170x265	1070x1070	92,09	0,39
Version UL approval Nema 4x, 12, 3r and 1			Add "UL" to the reference Ex."MVAB302015UL"									
Version IP67			Add "67" to the reference Ex."MVAB30201567"									
Version IP69K			Add "/69" to the reference Ex."MVAB302015/69"									

* Tribeca design

Separation depth plate 20 mm

10 YEARS
STAINLESS ANTICORROSIVE **GUARANTEE**

5 YEARS
MECHANICAL PARTS **GUARANTEE**

REFERENCES 2 DOORS

REFERENCES	DIMENSIONS (mm)							
2 BLINDS DOORS	HEIGHT - A -	WIDTH - B -	DEPTH - C -	ACCESS - GxH -	INSIDE DEPTH - D -	MACHINABLE AREA		PLATE MEASUREMENT -FxE-
						DOOR	SIDE	
MVAB806030D	800	600	300	746x546	270	720x217.5 and 720x173.5	720x240	740x540
MVAB808030D	800	800	300	746x746		720x317.5 and 720x273.5	720x240	740x740
MVAB108030D	1000	800	300	946x746		920x317.5 and 920x273.5	970x240	940x745
MVAB128030D	1200	800	300	1146x746		1120x317.5 and 1120x273.5	1170x240	1140x745
MVAB101030D	1000	1000	300	946x946		920x417.5 and 920x373.5	970x240	940x940
MVAB121030D	1200	1000	300	1146x946		1120x617.5 and 1120x573.5	1170x240	1140x945
MVAB121230D	1200	1200	300	1146x1146		1120x717.5 and 1120x673.5	1170x240	1140x1140
Option: Polycarbonate door (no IP69K)	Add "T" to the reference. Ex "MVAB806030DT"							
Option: Polycarbonate door + Inside door (no IP69K)	Add "TC" to the reference. Ex "MVAB806030DTC"							
Version UL approval Nema 4x, 12, 3r and 1	Add "UL" to the reference. Ex "MVAB806030DUL"							
Version IP67	Add "67" to the reference Ex."MVAB30201567"							
Version IP69K	Add "/69" to the reference Ex."MVAB302015/69"							

Separation depth plate 20 mm

STAINLESS STEEL FREE-STANDING ENCLOSURE

TRIBECA SERIES IP66



Example

Maximum Working Width for your Assemblies

Tribeca Series compact enclosures with improved design, robust, easy opening by rotating handle and four point lock, easy placement on the floor, flexible, maximum working width and a unique design in stainless steel AISI 304L. Available in one or two doors, 120° swivel, easily removable. We recommend cable entry hollow base.

FOR MORE INFORMATION CLICK HERE



STAINLESS STEEL FREE-STANDING ENCLOSURE TRIBECA SERIES IP66

APPLICATIONS

- Especially designed for automatic positioning, machine control meters and where smartness, quality and durability are necessary.
- Electrical control panel approved for food, chemical, pharmaceutical processing centres, telecommunications and outdoor use because of its advantages of durability and chemical resistance.

NORMATIVE

- To IP66 (IP55 two doors) Norm IEC 60529.
- DIN EN ISO 14159 Machine safety – hygiene requirements pertaining to the design of machinery.
- Machinery Directive 2006/42/EC. Food machinery and cosmetic or pharmaceutic production.
- EHEDG Guideline Hygienic Design doc.13 machinery for open processes.
- DIN EN 1672-2:2006 for food industry machinery.
- Maximum IK10 resistance Norm IEC 62262.
- Manufactured following EU low voltage ruling 2014/35/UE.
- Materials intended to come into contact with food EC 1935/2004.
- RoHs compliant.
- UL approval Nema 4x, 12, 3r, 1. N° File E342220.
- Maximum voltage 1000 V.
- Temperature resistant: -40°C +100°C (short time +160°C).
- Option silicone gasket: from –60°C to +180°C (short time up to +350°C).

FEATURES

- Supplied with protective film to prevent scratches and abrasions during handling.
- The manufacture of the stainless steel monobloc allows sealing and maximum resistance.
- A drainage channel prevents liquid contact with the polyurethane gasket and with concealed hinges.
- 100% Stainless Steel, from handle to opening system.
- Standard electrical panel with handle lock (four locking points) and concealed stainless steel hinges.
- Delvalle made to order in any size to suit your needs and all drilling holes, both for the door and the enclosure included.
- Distribuited load 600 kg.

OPTIONS

- Up to IP69K -DIN 40050-9.
- Option painted galvanized steel finish in RAL 7035 or another color.
- Custom made based on your needs.
- With a choice of two doors (from 1200 mm width).
- Plinths at base, castors.
- Metal legs.
- Clear polycarbonate door transparent safety glass door (no IP69K).
- Manufactured in stainless steel AISI 316L EN 14404.
- Mounting plate insulator (bakelite) or stainless steel.
- EMC version according to 2014/30/UE of electromagnetic compatibility.

STAINLESS STEEL FREE-STANDING ENCLOSURE **TRIBECA SERIES** IP66

PLAN

CLICK HERE TO DOWNLOAD
THE FILES CAD - PLANS - CERTIFICATES

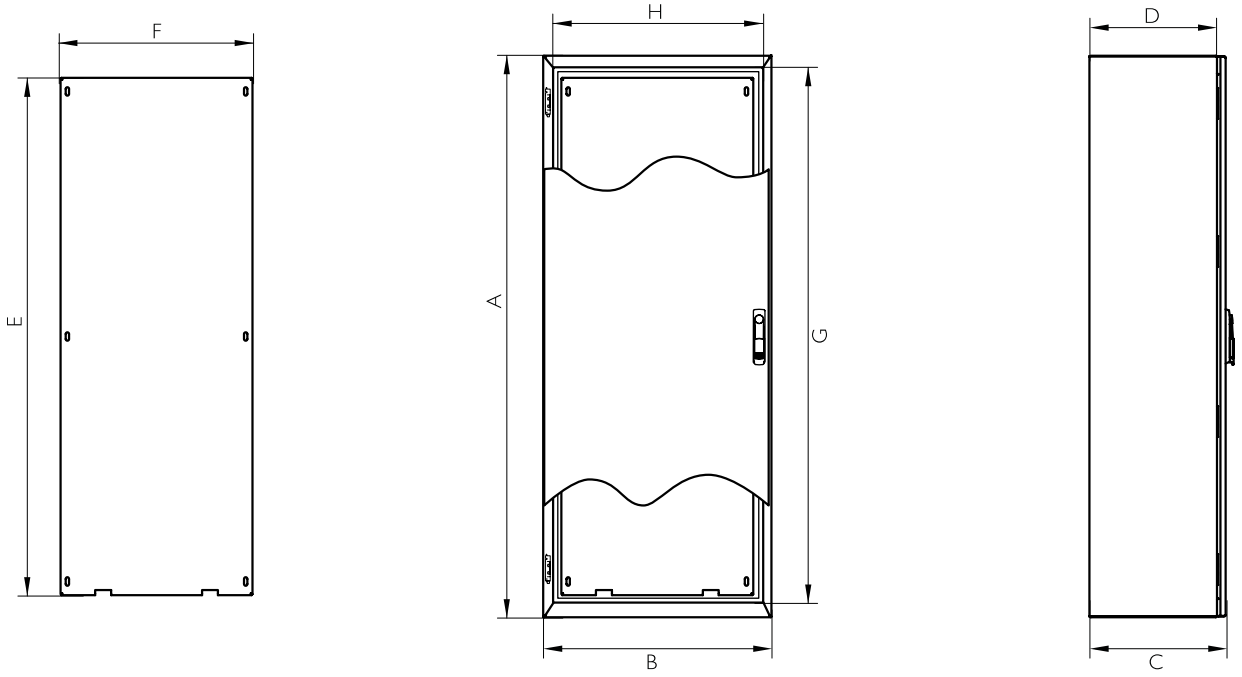

10 YEARS
STAINLESS ANTICORROSIVE **GUARANTEE**

5 YEARS
MECHANICAL PARTS **GUARANTEE**

REFERENCES I DOOR

REFERENCES		DIMENSIONS (mm)									
BLIND DOOR	POLYCARBONATE DOOR (no IP69K)	HEIGHT -A-	WIDTH -B-	DEPTH -C-	ACCESS -GxH-	INSIDE DEPTH -D-	MACHINABLE AREA		PLATE MEASUREMENT -ExF-	WEIGHT (Kg)	VOLUME (m^3)
							DOOR	SIDE			
MVAC166040	MVACT166040	1650	600	400	1540x490	375	1524.8x474.8	1640x365	1520x470	70,9	0,42
MVAC168040	MVACT168040		800		1540x690		1524.8x674.8	1640x365	1520x670	93,25	0,56
MVAC161040	MVACT161040		1000		1540x890		1524.8x874.8	1640x365	1520x870	111,3	0,70
MVAC186040	MVACT186040	1800	600		1690x490		1674.8x474.8	1790x365	1670x470	76,61	0,46
MVAC188040	MVACT188040		800		1690x690		1600x600	1790x365	1670x670	100,76	0,61
MVAC188050	MVACT188050			500	1690x690	475	1600x600	1790x465	1670x670	107,21	0,76
MVAC181040	MVACT186050		1000	400	1690x890	375	1600x800	1790x365	1670x870	120,24	0,76
MVAC181050	MVACT188050			500	1690x890	475	1600x800	1790x465	1670x870	127,18	0,95
MVAC206040	MVACT206040	2000	600		1890x490		1874.8x474.8	1990x465	1870x470	84,68	0,51
MVAC208040	MVACT208040		800	400	1890x690	375	1800x600	1990x365	1870x670	111,19	0,68
MVAC208050	MVACT208050			500	1890x690	475	1800x600	1990x465	1870x670	118,13	0,85
MVAC201040	MVACT201040		1000	400	1890x890	375	1800x800	1990x365	1870x870	132,58	0,85
MVAC201050	MVACT201050			500	1890x890	475	1800x800	1990x465	1870x870	140	1,05
Version: Normative UL		Add "UL" to the reference. Ex "MVAC166040 UL"									
Version IP66		Add "66" to the reference Ex. "MVAC30201567"									
Version IP69K		Add "/69" to the reference Ex. "MVAC302015/69"									

Separation depth plate 20mm

Phone +34 945 601 381
comercial@delvalle.es | www.delvallebox.com

STAINLESS STEEL FREE-STANDING ENCLOSURE TRIBECA SERIES IP66



Tribeca with insulation

Tribeca without insulation



REFERENCES 2 DOORS

REFERENCES		DIMENSIONS (mm)									
BLIND DOOR	POLYCARBONATE DOOR (no IP69K)	HEIGHT -A-	WIDTH -B-	DEPTH -C-	ACCESS -GxH-	INSIDE DEPTH -D-	MACHINABLE AREA		PLATE MEASUREMENT -ExF-	WEIGHT (Kg)	VOLUME (m^3)
							DOOR	SIDE			
MVAC161240	MVACT161240	1650	1200	400	1540x1090	375	1524.8x464.2 and 1524.8x497.2	1640x365	1520x1070	129,33	0,84
MVAC181240	MVACT181240	1800	1200		1690x1090		1674.8x464.2 and 1674.8x497.2	1790x365	1670x1070	139,7	0,91
MVAC181250	MVACT181250			500	1690x1090	475	1674.8x464.2 and 1674.8x497.2	1790x465	1670x1070	147,12	1,14
MVAC201240	MVACT201240	2000	1200	400	1890x1090	375	1874.8x464.2 and 1874.8x497.2	1990x365	1870x1070	149,61	1,02
MVAC201250	MVACT201250			500	1890x1290	475	1874.8x464.2 and 1874.8x497.2	1990x465	1870x1070	157,51	1,26
MVAC201440	MVACT201440		1400	400	1890x1290	375	1874.8x664.2 and 1874.8x697.2	1990x365	1870x1270	169,38	1,18
MVAC201450	MVACT201450			500	1890x1290	475	1874.8x664.2 and1874.8x697.2	1990x465	1870x1270	177,76	1,47
MVAC201640	MVACT201640		1600	400	1890x1490	375	1810x605 and 1810x605	1990x365	1870x1470	189,12	1,35
MVAC201650	MVACT201650			500	1890x1490	475	1810x605 and 1810x605	1990x465	1870x1470	197,99	1,68
Version: Normative UL		Add "UL" to the reference. Ex "MVAC166040 UL"									
Version IP66		Add "66" to the reference Ex."MVAC30201567"									
Version IP69K		Add "/69" to the reference Ex."MVAC302015/69"									

Separation depth plate 20mm



Tribeca with double doors



MODULAR STAINLESS STEEL ENCLOSURE

TITAN SERIES IP66



Example

Perfect Sealing Thanks to Gaskets Used in the Joints

Modular stainless steel enclosure Titan Series, stylish and corrosion resistant, completely adaptable, flexible, for food, petrochemical, pharmaceutical industries, electrical use, which require smartness hygiene, sealing and long life. Our system is a closed profile in stainless steel steel, welded, give greater strength and top quality.
The doors sides and rear are hinged and easily removable with 120° opening, thanks to assembly with screws.
All this is achieved with a perfect assembly system where after the construction requested modules are coupled with screws. But the best advantage of this cabinet is the versatility it provides, in Addition to the large number of customized accessories.
A perfect assembly system that gives the most consistent cabinet and facilitates the assembly of other components, along with an elegant finish make this the Titan stainless steel, one of the most popular enclosures.

FOR MORE INFORMATION CLICK HERE



MODULAR STAINLESS STEEL ENCLOSURE TITAN SERIES IP66

APPLICATIONS

Especially designed for maximum flexibility in use. Thanks to its versatility it can be used in the food and pharmaceuticals industries, where hygiene is essential, as in petrochemical, electrical, industries where total sealing is essential and also in general industrial environments always offering a long life.

NORMATIVE

- IP55 or IP66 Norm EN 62208 / EN 60529.
- DIN EN ISO 14159 Machine safety – hygiene requirements pertaining to the design of machinery.
- Machinery Directive 2006/42/EC. Food machinery and cosmetic or pharmaceutic production.
- EHEDG Guideline Hygienic Design doc.13 machinery for open processes.
- DIN EN 1672-2:2006 for food industry machinery.
- Maximum IK10 resistance Norm IEC 62208 and EN 50102.
- Manufactured following EU low voltage ruling 2014/35/UE.
- RoHS Directive 2011/65/UE compliant.
- UL approval Nema 4x, 12, 3r, 1. Nº File E342220.
- Maximum voltage 1000 V.
- Temperature resistant: -40°C +100°C (short time +160°C).
- Option silicone gasket: from -60°C to +180°C (short time up to +350°C).

OPTIONS

- Up to IP69K -DIN 40050-9.
- Option painted galvanized steel finish in RAL 7035 or another color.
- Custom made based on your needs.
- With the possibility to join several modules.
- Plinths at base. Swing rack.
- Eyebolt (not included in standard model).
- All types of ventilation.
- Cable entry cover at base.
- Metal legs and wheels.
- Transparent polycarbonate door, with tempered glass or with safety glass (no IP69k).
- Finished in textured paint RAL on request.
- Mounting plate insulator (bakelite) or painted steel.
- Manufactured in stainless steel AISI 316L EN 14404.
- EMC version according to 2014/30/UE of electromagnetic compatibility.

ADVANTAGES

- Broad assembly area and great accessibility.
- Endless choices, modules and measurements.
- Delivery soldier, which gives it great strength.
- Side rear, top and bottom panels, easily removable.
- 100% stainless steel from handle to opening system.
- Door opens to 120°.
- Standard with three or four width points lock.
- Perfect sealing thanks to gaskets used in the joints.
- Delvalle supplies any measurements required including custom built holes and cut outs both for the door and enclosure.
- Distribuited load 1000 kg.

MODULAR STAINLESS STEEL ENCLOSURE TITAN SERIES IP66

PLAN

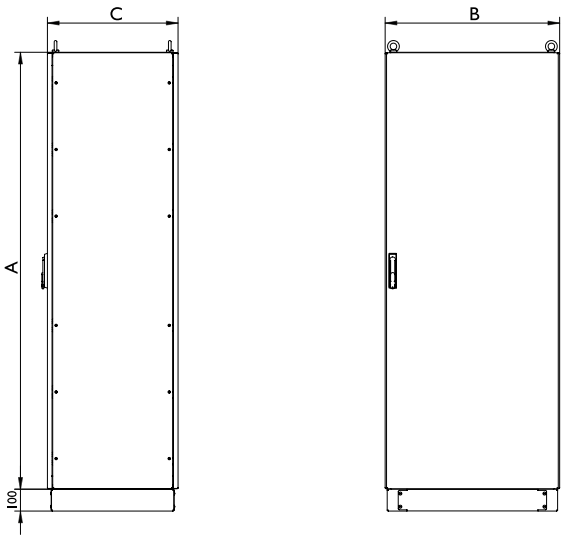

CLICK HERE TO DOWNLOAD
THE FILES CAD - PLANS - CERTIFICATES

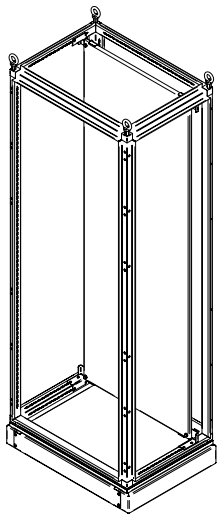

REFERENCES 2 DOORS

REFERENCES	DIMENSIONS (mm)				
BLIND DOOR	HEIGHT -A-	WIDTH -B-	DEPTH -C-	WEIGHT (Kg)	VOLUME (m^3)
MVAF181050/2	1800	1000	500	166,76	0,95
MVAF181060/2			600	175,26	1,13
MVAF201040/2	2000	1000	400	165,96	0,85
MVAF201050/2			500	174,73	1,05
MVAF201240/2		1200	400	195,03	1,02
MVAF201250/2			500	204,48	1,26
MVAF201260/2			600	213,94	1,51
MVAF201280/2			800	255,95	2,19
MVAF221260/2	2200		600	229,97	1,65
MVAF221280/2			800	255,95	2,19
MVAF221080/2		1000	800	229,84	1,83
Version UL	Add "UL" to the reference. Ex: "MVAF126040UL"				
Version IP66	Add "66" to the reference Ex. "MVAF30201567"				
Version IP69K	Add "66" to the reference Ex. "MVAF30201567"				

Separation depth plate 20mm

10 YEARS
STAINLESS ANTICORROSIVE **GUARANTEE**

5 YEARS
MECHANICAL PARTS **GUARANTEE**





MODULAR STAINLESS STEEL ENCLOSURE TITAN SERIES IP66

REFERENCES 1 DOOR

REFERENCES	DIMENSIONS (mm)				
BLIND DOOR	HEIGHT -A-	WIDTH -B-	DEPTH -C-	WEIGHT (Kg)	VOLUME (m^3)
MVAF126040	1200	600	400	79,75	0,31
MVAF126060			600	91,51	0,46
MVAF126080			800	107,1	0,61
MVAF128040		800	400	98,23	0,41
MVAF128060			600	110,97	0,61
MVAF128080			800	127,51	0,81
MVAF146040	1400	600	400	87,81	0,36
MVAF146060			600	101	0,53
MVAF146080			800	118,01	0,71
MVAF148040		800	400	112,63	0,48
MVAF148060			600	123,12	0,71
MVAF148080			800	141,09	0,94
MVAF166040	1600	600	400	98,14	0,41
MVAF166060			600	111,41	0,61
MVAF166080			800	129,82	0,81
MVAF168040		800	400	121,01	0,55
MVAF168060			600	135,25	0,81
MVAF168080			800	154,61	1,07
MVAF161040		100	400	139,78	0,68
MVAF161060			600	154,98	1,01
MVAF161080			800	175,31	1,34
MVAF161240		120	400	158,53	0,81
MVAF161260			600	174,69	1,21
MVAF161280			800	195,98	1,60
MVAF186040	1800	600	400	106,65	0,46
MVAF186050			500	113,98	0,57
MVAF186060			600	121,32	0,69
MVAF186080			800	141,16	0,91
MVAF188040		800	400	131,75	0,61
MVAF188050			500	139,56	0,76
MVAF188060			600	147,38	0,91
MVAF188080			800	168,19	1,21
MVAF181040		1000	400	139,78	0,68
MVAF181050			500	160,56	0,95
MVAF181060			600	168,86	1,13
MVAF181080			800	190,63	1,50
MVAF181240		1200	400	172,76	0,91
MVAF181250			500	181,53	1,14
MVAF181260			600	190,31	1,36
MVAF181280			800	213,05	1,80
MVAF203050	2000	300	500	90,82	0,33
MVAF203060			600	97,9	0,39
MVAF203080			800	117,73	0,52
MVAF204050		400	500	101,95	0,43
MVAF204060			600	109,27	0,51
MVAF206040		600	400	116,39	0,51
MVAF206050			500	124,2	0,64
MVAF206060			600	132,02	0,76
MVAF206080			800	153,28	1,01
MVAF208040		800	400	143,7	0,68
MVAF208050			500	152	0,85
MVAF208060			600	160,28	1,01
MVAF208080			800	182,51	1,34
MVAF208010			100	199,58	1,67
MVAF201040		1000	400	165,96	0,85
MVAF201050			500	174,73	1,05
MVAF201060			600	183,52	1,26
MVAF201080			800	206,7	1,67
MVAF226060	2200	600	600	141,93	0,84
MVAF226080			800	164,63	1,11
MVAF228060		800	800	172,38	1,11
MVAF228080			800	196,04	1,47
MVAF221060		1000	600	197,36	1,38
MVAF221080			800	221,97	1,83
Version UL	Add "UL" to the reference. Ex: "MVAF126040UL"				
Version IP66	Add "66" to the reference Ex. "MVAF30201567"				
Version IP69K	Add "66" to the reference Ex. "MVAF30201567"				

Separation depth plate 20mm





PUSH-BUTTON AND JUNCTION STAINLESS STEEL BOX

GEO SERIES IP66



Examples



Strength, Durability and Long Life

Geo Series push-button and junction boxes, elegant watertight boxes made wholly in finely polished AISI 304L EN-14306 stainless steel available in plain or bored covers (22.5).
Specially designed for placing push-buttons.

FOR MORE INFORMATION CLICK HERE



PUSH-BUTTON AND JUNCTION STAINLESS STEEL BOX **GEO SERIES** IP66

APPLICATIONS

Especially designed and officially approved for food, chemical, pharmaceutical, transformer and telecommunication industries for use both inside and outside, due to the advantages of high resistance to chemical agents and durability.

10 YEARS
STAINLESS ANTICORROSIVE **GUARANTEE**

5 YEARS
MECHANICAL PARTS **GUARANTEE**

NORMATIVE

- IP55 or IP66 (W) Norm EN 62208 / EN 60529.
- DIN EN ISO 14159 Machine safety – hygiene requirements pertaining to the design of machinery.
- Machinery Directive 2006/42/EC. Food machinery and cosmetic or pharmaceutic production.
- EHEDG Guideline Hygienic Design doc.13 machinery for open processes.
- DIN EN 1672-2:2006 for food industry machinery.
- Maximum IK10 resistance Norm IEC 62208 and EN 50102.
- Manufactured following EU low voltage ruling 2014/35/UE.
- RoHS Directive 2011/65/UE compliant.
- UL approval Nema 4x, 12, 3r, 1. Nº File E342220.
- Maximum voltage 1000 V.
- Temperature resistant: -40°C +100°C (short time +160°C).
- Option silicone gasket: from -60°C to +180°C (short time up to +350°C).

OPTIONS

- Custom made based on your needs.
- IP67 according IEC EN 62208 and EN 60529.
- Up to IP69K -DIN 40050-9.
- Manufactured in stainless steel AISI 316L EN 14404.
- Metal legs.
- Unloosable screws.
- Finished in textured paint RAL on request.
- Mounting plate insulator (bakelite) or painted steel.
- EMC version according to 2014/30/UE of electromagnetic compatibility.
- Option painted galvanized steel finish in RAL 7035 or another color.

ADVANTAGES

- Strength, durability and long life.
- Special built to measure solutions.
- 100% stainless steel.
- Wide variety of accessories.
- Stainless steel AISI 304L or AISI 316L.
- Unlimited options.
- Supplied with protective film which prevents scratches and abrasions during handling.
- The manufacture of the stainless steel monobloc allows sealing and ensures maximum resistance.
- Water channel to prevent liquids coming into contact with the polyurethane seal and hidden hinges giving perfect sealing.
- Delvalle supplies any measurements required including custom built holes and cut outs both for the door and enclosure.
- Up to IP67 or IP69K.

PUSH-BUTTON AND JUNCTION STAINLESS STEEL BOX **GEO SERIES** IP66

PLAN

CLICK HERE TO DOWNLOAD
THE FILES CAD - PLANS - CERTIFICATES

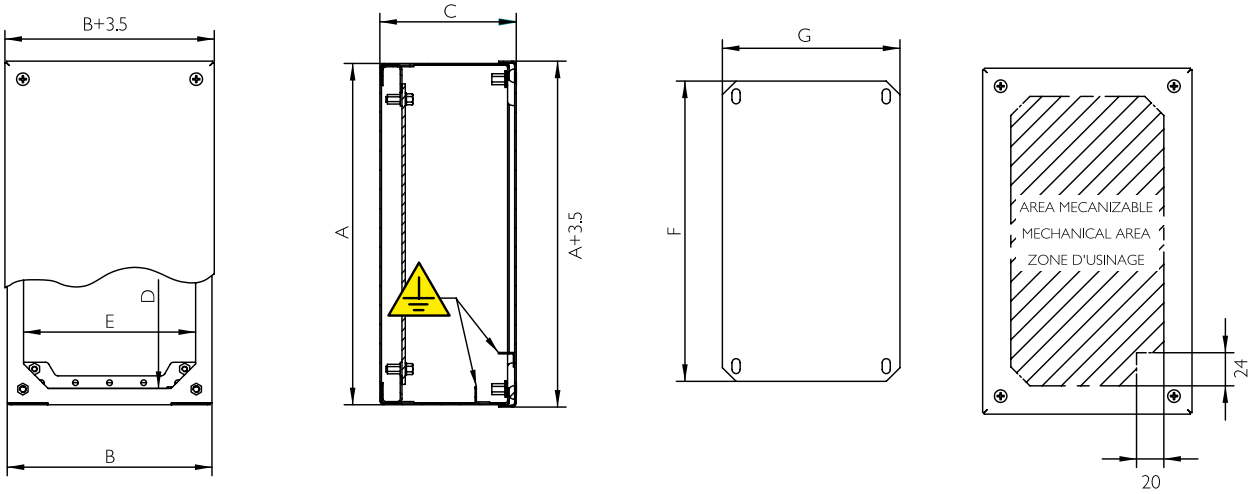

10 YEARS
STAINLESS ANTICORROSIVE **GUARANTEE**

5 YEARS
MECHANICAL PARTS **GUARANTEE**



REFERENCES

REFERENCES		COVER	DIMENSIONS (mm)							
BLIND COVER	PERFORATED COVER	N° HOLES	HEIGHT - A -	WIDTH - B -	DEPTH - C -	ACCESS - DxE -	MACHINABLE AREA	PLATE MEASUR. - FxG -	WEIGHT (Kg)	VOLUME (m^3)
MVCB909080	MVCB909080P	1	90	90	80	66x66	48x48	60x70	0,68	0,001
MVCB149080	MVCB149080P	2	140	90	80	116x66	98x48	110x70	0,92	0,001
MVCB209080	MVCB209080P	3	200	90	80	176x66	158x48	170x70	1,2	0,002
MVCB269012	MVCB269012P	4	260	90	120	236x66	218x48	230x70	1,75	0,004
MCVB289080	MCVB289080P	5	280	90	80	256x66	238x48	250x70	1,6	0,002
MVCB101612	MVCB101612P	3	100	160	120	76x136	58x118	70x140	1,29	0,003
MVCB161612	MVCB161612P	4	160	160	120	136x136	118x118	130x140	1,81	0,004
MVCB202012	MVCB202012P	6	200	200	120	176x176	158x158	170x180	2,53	0,006
MVCB202515	MVCB202515P	12	200	250	150	176x226	158x208	170x230	3,25	0,009
MVCB252515	MVCB252515P	16	250	250	150	226x226	208x208	220x230	3,87	0,012
MVCB203015	MVCB203015P	15	200	300	150	176x276	158x258	170x280	3,75	0,011
MVCB303015	MVCB303015P	25	300	300	150	276x276	258x258	270x280	5,16	0,016
MVCB304015	MVCB304015P	35	300	400	150	276x376	258x358	270x380	6,64	0,022
MVCB404015	MVCB404015P	49	400	400	150	376x376	358x358	370x380	8,41	0,028
Version: Normative UL			Add "UL" a la referencia Ej. "MVCB909080UL"							
Version IP67			Add "67" to the reference Ex. "MVAB30201567"							
Version IP69K			Add "/69" to the reference Ex. "MVAB302015/69"							

PANORAMIC WALL MOUNTED STAINLESS STEEL CABINET
LUXOR TEDEO SERIES IP66



Delvalle Supplies any Measurements Required

Delvalle knows the needs of our customers and for this we've created the panoramic wall mounted Luxor Tedeo Series completely stainless steel cabinet, with two or three doors AISI 304L EN 14306.
The cabinet design follows the same philosophy of sealing and strength as our other electrical cabinets but this time focusing on their horizontal integration in the machinery use for both above and below use.
High performance stainless steel used to offer quality, reliability and consistency and by following strict manufacture controls without forgetting the satin or brushed finish and the option of RAL 7035 polyester painting make it ideal for outside use.

Examples



FOR MORE INFORMATION CLICK HERE



PANORAMIC WALL MOUNTED STAINLESS STEEL CABINET **LUXOR TEDEO SERIES** IP66

APPLICATIONS

Especially designed for maximum flexibility in use. Thanks to its versatility it can be used in the food and pharmaceuticals industries, where hygiene is essential, as in petrochemical, electrical, industries where total sealing is essential and also in general industrial environments always offering a long life.



ADVANTAGES

- Supplied with protective film which prevents scratches and abrasions during handling.
- It integrates into the machine horizontally
- Can be placed at the top or bottom.
- Two ways of opening sidewords or upwards using a hydraulic door mechanism in each case.
- The standard stainless steel electrical panel comes with 90 o double bit locks, 3 fixing points and hidden hinges
- Delvalle supplies any measurements required including custom built holes and cut outs both for the door and enclosure

OPTIONS

- Custom made based on your needs.
- With the possibility to join several modules.
- Plinths at base
- Eyebolt (not included in standard model).
- Swing rack.
- All types of ventilation.
- Cable entry cover at base.
- Metal legs and wheels.
- Up to IP69K -DIN 40050-9.
- Transparent polycarbonate door, with tempered glass or with safety glass.
- Finished in textured paint RAL on request.
- Mounting plate insulator (bakelite) or painted steel.
- Manufactured in stainless steel AISI 316L. EN 14404.
- EMC version according to 2014/30/UE of electromagnetic compatibility.

NORMS

- IP66 (W) (IP55 double door without mounting, IP66 with central welded bar mounting) Norm IEC 60529.
- Maximum IK10 resistance Norm IEC 62262.
- Manufactured following EU low voltage ruling 2014/35/UE.
- RoHS Directive 2011/65/UE compliant.
- UL approval Nema 4x, 12, 3r, 1. Nº File E342220.
- Maximum voltage 1000 V
- Operating temperature -30°C to +60°C.

Phone +34 945 601 381
comercial@delvalle.es | www.delvallebox.com

PANORAMIC WALL MOUNTED STAINLESS STEEL CABINET LUXOR TEDEO SERIES IP66

PLANS

CLICK HERE TO DOWNLOAD
THE FILES CAD - PLANS - CERTIFICATES

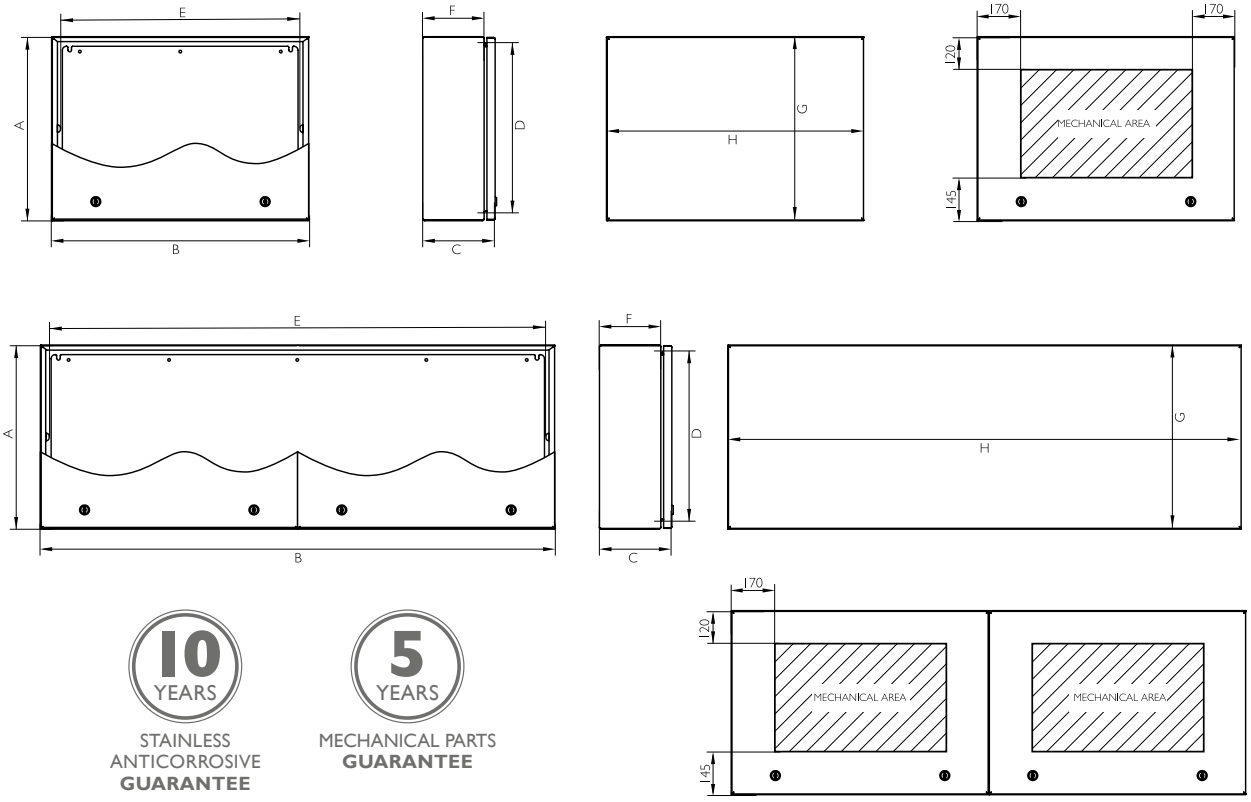

10 YEARS
STAINLESS ANTICORROSIVE **GUARANTEE**

5 YEARS
MECHANICAL PARTS **GUARANTEE**

REFERENCES

REFERENCES		DIMENSIONS (mm)									
BLIND DOOR	N° DOORS	HEIGHT - A -	WIDTH - B -	DEPTH - C -	INSIDE HEIGHT - D -	INSIDE WIDTH - E -	INSIDE DEPTH -F-	MECHINABLE SIDE AREA (F-15mm per side)	PLATE MEASUR. -GxH-	POIDS (Kg)	VOLUME (m^3)
TD505030	1	500	500	300	446	400	270	240	400x400	20,14	0,08
TD507530			750			650			400x650	26,15	0,12
TD501030			1000			900			400x900	32.17	0,16
TD501230			1250			1150			400x1150	38,19	0,21
TD501530			1500			1400			400x1400	44,21	0,24
TD501030.2P	2		1000			900			400x450 (2)	32,97	0,16
TD501230.2P			1200			1100			400x550 (2)	38,73	0,20
TD501430.2P			1400			1300			400x650 (2)	44,48	0,23
TD501630.2P			1600			1500			400x750 (2)	50,24	0,26
TD501830.2P			1800			1700			400x850 (2)	55,99	0,29
TD502030.2P			2000			1900			400x950 (2)	61,75	0,33
TD502230.3P	3		2250			2150			400x715 (3)	68,94	0,37
TD502530.3P			2500			2400			400x800 (3)	76,14	0,41
TD503030.3P			3000			2900			400x967 (3)	90,53	0,49
Version: Norm UL	Add "UL" to reference. Ex. "TD501030UL"										
Version: Transparent door	Add "T" to reference. Ex. "TD501030T" "TD501030T.2P" "TD502230T.3P"										

Separation depth plate 20mm

NEMA ENCLOSURES WITH DISCONNECT SWITCHES



Examples



Disconnect Switches
Nema for Enclosures

Installed on Nema 1, 3r, 4x, 12 enclosures, disconnect switches can be used at both indoor and outdoor applications. Together with a system of enclosure-and-door interlocks, disconnect switches provide an additional level of safety by preventing operators from opening any door when the disconnect switch is energized.
We manufacture both single and multi-door disconnect switches.
Cable Operated System Thinner cable design for more flexibility and lower bend diameter.

FOR MORE INFORMATION CLICK HERE

APPLICATIONS

- Automotive
- Machinery Food & Beverage
- Packaging
- Oil & Gas
- Water/Wastewater
- Paper & Packaging
- Utilities & Mining
- Industrial Manufacturing

NEMA ENCLOSURES WITH DISCONNECT SWITCHES

FEATURES

- Fuse admits Class E, H, J and R
- Switch 30….600A
- Enclosure Options:
  - Painted steel: Nema 1/3R/4/12
  - Stainless steel or aluminium: Nema 4/4X





MOUNTING





10 YEARS
STAINLESS ANTICORROSIVE **GUARANTEE**

UL
NEMA
1 - 3R - 4X - 12

5 YEARS
MECHANICAL PARTS **GUARANTEE**

DESIGNS



BASIC DESIGN
Single door cabinet.



DESIGN 2 DOORS
DESIGN con doble DOOR.



3 DOOR DESIGN
Triple door design.

NEMA ENCLOSURES WITH DISCONNECT SWITCHES

NORMATIVE

- IP66 (W) Norm IEC 60529.
- Maximum IK10 resistance Norm IEC 62262
- Manufactured following EU low voltage ruling 2014/35/UE
- Materials intended to come into contact with food EC 1935/2004
- RoHs compliant
- UL approval Nema 4x, 12, 3r, 1. N°File E342220
- Maximum voltage 1000 V
- IEC 60947
- Temperature resistant: -40°C +100°C (short time +160°C.)
- Option silicone gasket: from –60° C to +180° C (short time up to +350° C)
- UL 508 Listed
- UL 98
- CE Marked
- CSA C22.2 N° 4
- Nema 1/3r/4/4x/12

PLAN

CLICK HERE TO DOWNLOAD
THE FILES CAD - PLANS - CERTIFICATES

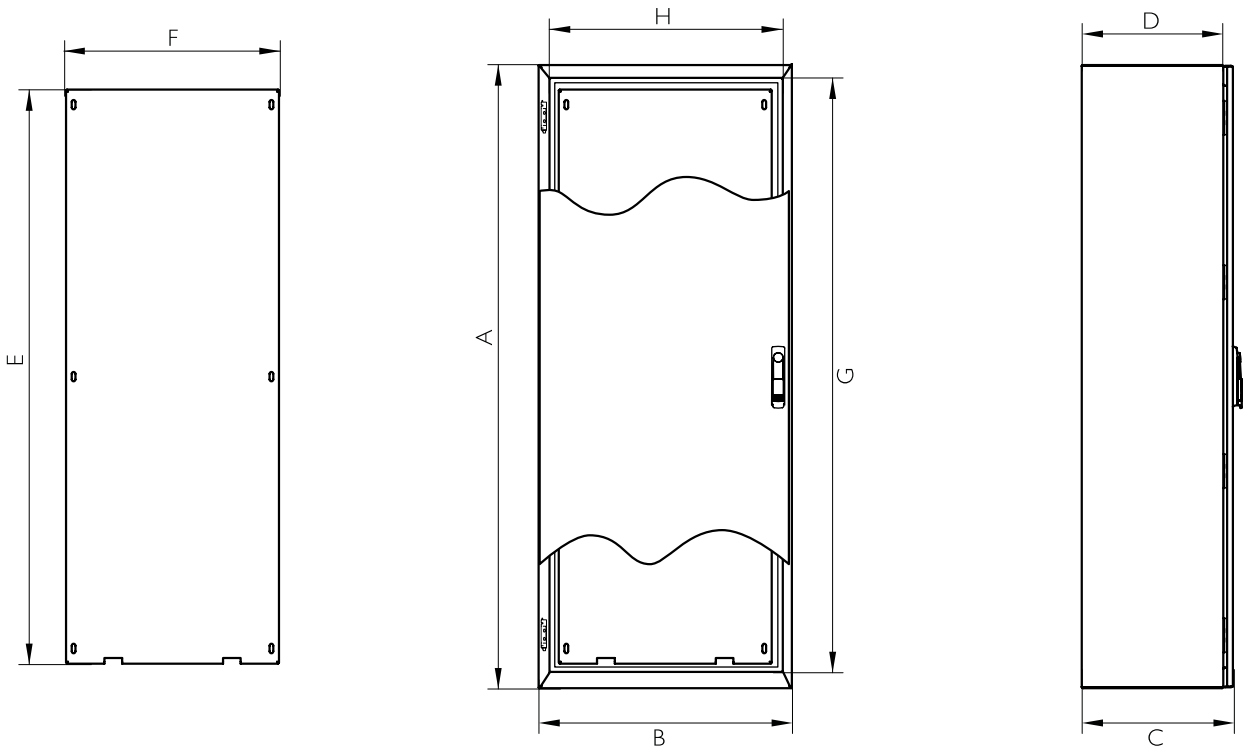

NEMA ENCLOSURES WITH DISCONNECT SWITCHES

REFERENCES 1 DOOR

REFERENCES	DIMENSIONS (mm)										
BLIND DOOR	N° DOORS	HEIGHT - A -	WIDTH - B -	DEPTH - C -	HOLE ACCESS - GxH -	DEPTH USEFUL INTERIOR - D -	MACHINABLE DOOR AREA	MACHINABLE SIDE AREA	PLATE MEASUREMENT -ExF-	WEIGHT (Kg)	VOLUME (m^3)
MVAC165440DSC	1	1650	540	400	1540x430	375	1524.8x414.8	1640x365	1520x470	70,9	0,42
MVAC167440DSC			740		1540x630		1524.8x614.8	1640x365	1520x670	93,25	0,56
MVAC169440DSC			940		1540x830		1524.8x814.8	1640x365	1520x870	111,3	0,70
MVAC185440DSC		1800	540		1690x430		1674.8x414.8	1790x365	1670x470	76,61	0,46
MVAC187440DSC			740		1690x630		1600x540	1790x365	1670x670	100,76	0,61
MVAC187450DSC				500	1690x630	475	1600x540	1790x465	1670x670	107,21	0,76
MVAC189440DSC			940	400	1690x830	375	1600x740	1790x365	1670x870	120,24	0,76
MVAC189450DSC				500	1690x830	475	1600x740	1790x465	1670x870	127,18	0,95
MVAC205440DSC		2000	540	400	1890x430		1874.8x414.8	1990x465	1870x470	84,68	0,51
MVAC207440DSC			740		1890x630	375	1800x540	1990x365	1870x670	111,19	0,68
MVAC207450DSC				500	1890x630	475	1800x540	1990x465	1870x670	118,13	0,85
MVAC209440DSC			940	400	1890x830	375	1800x740	1990x365	1870x870	132,58	0,85
MVAC209450DSC				500	1890x830	475	1800x740	1990x465	1870x870	140	1,05

Separation depth plate 20mm

REFERENCES 2 DOORS

REFERENCES	DIMENSIONS (mm)										
BLIND DOOR	N° DOORS	HEIGHT - A -	WIDTH - B -	DEPTH - C -	HOLE ACCESS - GxH -	DEPTH USEFUL INTERIOR - D -	MACHINABLE DOOR AREA	MACHINABLE SIDE AREA	PLATE MEASUREMENT -ExF-	WEIGHT (Kg)	VOLUME (m^3)
MVAC161140DSC	2	1650	1140	400	1540x1030		1524.8x404.2 and 1524.8x437.2	1640x365	1520x1070	129,33	0,84
MVAC181140DSC		1800	1140		1690x1030	375	1674.8x404.2 and 1674.8x437.2	1790x365	1670x1070	139,7	0,91
MVAC181150DSC				500	1690x1030	475	1674.8x404.2 and 1674.8x437.2	1790x465	1670x1070	147,12	1,14
MVAC201140DSC		2000	1140	400	1890x1030	375	1874.8x404.2 and 1874.8x437.2	1990x365	1870x1070	149,61	1,02
MVAC201150DSC				500	1890x1230	475	1874.8x404.2 and 1874.8x437.2	1990x465	1870x1070	157,51	1,26
MVAC201340DSC			1340	400	1890x1230	375	1874.8x604.2 and 1874.8x637.2	1990x365	1870x1270	169,38	1,18
MVAC201350DSC				500	1890x1230	475	1874.8x604.2 and 1874.8x637.2	1990x465	1870x1270	177,76	1,47
MVAC201540DSC			1540	400	1890x1430	375	1810x545 and 1810x545	1990x365	1870x1470	189,12	1,35
MVAC201550DSC				500	1890x1430	475	1810x545 and 1810x545	1990x465	1870x1470	197,99	1,68

Separation depth plate 20mm

STAINLESS STEEL SEISMIC ELECTRICAL ENCLOSURE IP66



Examples

More Resistance Tanks to Structural Reinforcement for Maximum Durability

Seismic reinforced enclosure, single or double door, manufactured in stainless steel AISI 304L, EN 1.4306 finely polished, to IP55 or IP66.
The design with structural reinforcements and special hinges on high resistance doors, allows our reinforced electrical cabinets to resist large weights both on the structure and on the doors, whilst also housing heavy elements inside.
The seismic cabinets have been vigorously tested and have withstood tests for the strongest seismic activity, offering the customer high level protection in areas where seismic activity is a possibility.
They can be installed outdoors, with vandal proof duraluminium lever lock.
The seismic cabinet is provided with exterior plastic protection which prevents scratches when handling and positioning the automats inside the cabinet. This cover can be easily removed at the customer's premises. Optionally rack mountable panel.

FOR MORE INFORMATION CLICK HERE

APPLICATIONS

Specially designed for areas where they will be subject to constant vibration or high seismic stress.

STAINLESS STEEL SEISMIC ELECTRICAL ENCLOSURE IP66

ADVANTAGES

- Broad assembly area with great accessibility.
- Great strength as a whole.
- Door opens to 120°, standard door opening to the left specify for a right side.
- Standard with toggle clasp made of stainless steel.
- Great versatility, so it can be applied to almost any field.
- Delvalle supplies any measurements required including custom built holes and cut outs both for the door and enclosure.
- Distribuited load 1000 kg.

OPTIONS

- Earthquake-resistant design, seismic testing under standar UNE EN 60068-3-3.
- Special individual solutions.
- More resistance tanks to structural reinforcement for maximum durability.
- Stainless steel AISI 316L.
- Up to IP69K -DIN 40050-9.
- Painted steel.
- Broad assembly area with great accessibility.
- Great strength as a whole.
- Standard with toggle clasp made of stainless steel.

NORMATIVE

- IP66 (W) Norm IEC EN 62208 EN 60529.
- Maximum IK10 resistance Norm IEC 62208 and EN 50102
- Our electrical panels are built to CE standards. 2014/35/UE
- Seismic qualification specification certificates 8484-CE-005-E.
- Norm IEEE-344, Institute of American electrical and electronic Engineers. RoHs compliant.
- UL approval Nema 4x, 12, 3r, 1. N° File E342220.
- Norm UNE EN 60068-3-3 Environment at and seismic testing methods.
- Maximum voltage 1000 V.
- Temperature resistant: -40°C +100°C (short time +160°C).
- Option silicone gasket: from -60°C to +180°C (short time up to +350°C).
- Regulations Board of the Nuclear Security.

PLAN

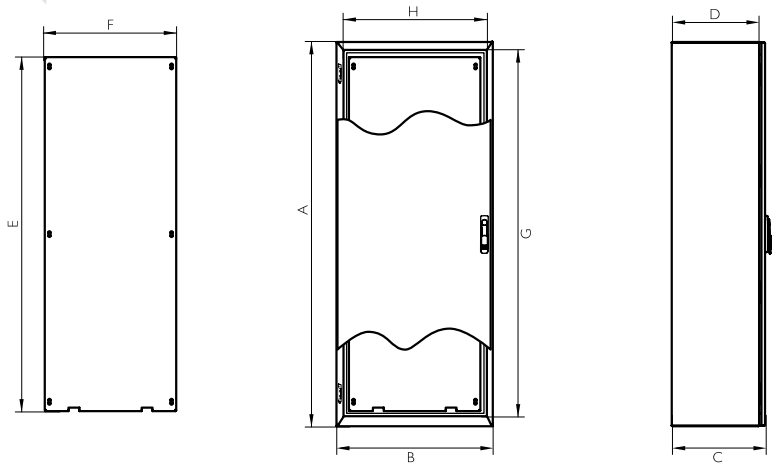

CLICK HERE TO DOWNLOAD
THE FILES CAD - PLANS - CERTIFICATES

10 YEARS
STAINLESS ANTICORROSIVE **GUARANTEE**

5 YEARS
MECHANICAL PARTS **GUARANTEE**

STAINLESS STEEL SEISMIC ELECTRICAL ENCLOSURE IP66

REFERENCES 1 DOOR

These references belong to the model of stainless steel AISI 304L, if you want painted steel replace "MVAC" of the reference principle with "MVHC". Ex: MVHC166040R

REFERENCES	DIMENSIONS (mm)							
BLIND DOOR	HEIGHT - A -	WIDTH - B -	DEPTH - C -	INSIDE HEIGHT - G -	INSIDE WIDTH - H -	INSIDE DEPTH - D -	MACHINABLE SIDE AREA (F-15 mm by each side)	PLATE MEASUREMENT -ExF-
MVAC166040R	1650	600	400	1540	490	375	355	1520x470
MVAC168040R	1650	800	400	1540	690	375	355	1520x670
MVAC161040R	1650	1000	400	1540	890	375	355	1520x870
MVAC186040R	1800	600	400	1690	490	375	355	1670x470
MVAC188040R	1800	800	400	1690	690	375	355	1670x670
MVAC186050R	1800	600	500	1690	490	475	455	1670x470
MVAC188050R	1800	800	500	1690	690	475	455	1670x670
MVAC181040R	1800	1000	400	1690	890	375	355	1670x870
MVAC181050R	1800	1000	500	1690	890	475	455	1670x870
MVAC206040R	2000	600	400	1890	600	375	355	1870x470
MVAC208040R	2000	800	400	1890	800	375	355	1870x670
MVAC208050R	2000	800	500	1890	800	475	455	1870x670
MVAC201040R	2000	1000	400	1890	890	375	355	1870x870
MVAC201050R	2000	1000	500	1890	890	475	455	1870x870
Version: Normative UL. Nema 4x, 12, 3r and 1				Add "UL" to the reference. Ex "MVAC166040RUL"				
Version: Stainless steel AISI 316L				Add "_6" to the reference. Ex "MVAC166040R_6"				

Separation depth plate 20mm

REFERENCES 2 DOORS

These references belong to the model of stainless steel AISI 304L, if you want painted steel replace "MVAC" of the reference principle with "MVHC". Ex: MVHC166040R

REFERENCES	DIMENSIONS (mm)							
BLIND DOOR	HEIGHT - A -	WIDTH - B -	DEPTH - C -	INSIDE HEIGHT - G -	INSIDE WIDTH - H -	INSIDE DEPTH - D -	MACHINABLE SIDE AREA (F-15 mm by each side)	PLATE MEASUREMENT -ExF-
MVAC161240DR	1650	1200	400	1540	1090	375	355	1520x1070
MVAC181240DR	1800	1200	400	1690	1090	375	355	1670x1070
MVAC181250DR	1800	1200	500	1690	1090	475	455	1670x1070
MVAC201240DR	2000	1200	400	1890	1090	375	355	1870x1070
MVAC201250DR	2000	1200	500	1890	1090	475	455	1870x1070
MVAC201440DR	2000	1400	400	1890	1290	375	355	1870x1270
MVAC201450DR	2000	1400	500	1890	1290	475	455	1870x1270
MVAC201640DR	2000	1600	400	1890	1490	375	355	1870x1470
MVAC201650DR	2000	1600	500	1890	1490	475	455	1870x1470
Version: Normative UL. Nema 4x, 12, 3r and 1				Add "UL" to the reference. Ex "MVAC166040RUL"				
Version: Stainless steel AISI 316L				Add "_6" to the reference. Ex "MVAC166040R_6"				

Separation depth plate 20mm

Phone +34 945 601 381
comercial@delvalle.es | www.delvallebox.com

ANTI-DUST SYSTEM FOR ELECTRICAL ENCLOSURES
DUSTY SERIES



Examples



The Pressure is Monitored Constantly

The Dusty Pressurization Series is designed for environments full of dirt, airborne dust, and for installation in corrosive environments.
Our enclosures system AISI 304 or 316 with the pressurization system prevents the damages to the electrical components produced by the gases or environmental powder. This is an economic system, 100 % reliable , it doesn´t requires any maintenance and lengthens the life of electronic components installed inside the cabinet with a 100% guarantee.
The removal of these gases or dust inside the cabinets extends the life by protecting the electrical or electronic components inside, avoiding stops and new costs on replacing the electronics, so we get an economic system. Forget complex systems and incorporate the latest technology.
The system can be placed indoors and outdoors and can be adapt to all our enclosures.

FOR MORE INFORMATION CLICK HERE



ANTI-DUST SYSTEM FOR ELECTRICAL ENCLOSURES **DUSTY SERIES**

HOW IT WORK?

It is a system that only requires an air´s compressed system connected to the grid or an inert gas. The pressure inside the cabinet will be above ambient so it is impossible the access of particles and gases, this means to improve the lifetime of electronic components.
The "Dusty" system maintains a constant pressure 1.24 mbar inside the cabinet.
The pressure is constantly monitored. These systems developed by Delvalle are the most reliable on the market , and we have appropriate systems for each application.
The enclosure system has a manual pressure regulator up to 5 psi , and a constant pressure meter which facilitates the security reading and control of pressurized enclosure.

Remark: This system is NOT suitable for hard and aggressive areas, to consult these areas, we have another system called Peppex Series.

10 YEARS
STAINLESS ANTICORROSIVE **GUARANTEE**

2 YEARS
MECHANICAL PARTS **GUARANTEE**

APPLICATIONS

- Areas with a lot of airborne dust
- Areas with high environmental corrosion
- Areas with fiberglass dust
- Laboratories
- Where a flameproof product is essential
- Offshore
- Paper industry
- Timber
- Mining

NORMS

- To IP65 (IP55 two doors) Norm IEC 60529.
- Maximum IK10 resistance Norm IEC 62262.
- Manufactured following EU low voltage ruling 2014/35/UE.
- Materials intended to come into contact with food EC 1935/2004.
- RoHs compliant.
- UL approval Nema 4x, 12, 3r, 1. N° File E342220.
- Maximum voltage 1000 V.
- Temperature resistant: -40°C +100°C (short time +160°C).

REFERENCES

CLICK HERE TO DOWNLOAD
THE FILES CAD - PLANS - CERTIFICATES

REFERENCES	DESCRIPTION
DST100	Dusty System with regulator and pressure signal
DST200	Dusty System with regulator
DST300	Dusty System with regulator, pressure signal and safety valve
DST400	Dusty System with regulator and safety valve
DST VENT	Safety valve for models DST100 and DST200



ELECTRICAL ENCLOSURES FOR RENEWABLE ENERGIES

SUNBOX LUXOR SERIES IP66



Examples



Perfect Sealing and Maximum Resistance

Electrical enclosures for renewable energies Sunbox manufactured in stainless steel AISI 304L.
Robust, developed and designed for outdoor use and more specifically for installations with extreme climatic conditions, such as solar or wind parks ensuring maximum resistance thanks to the stainless steel which it is manufactured with and greathy apreciated in Delvalle's experience with the major brands.
The cabinet is specifically approved for use in solar power systems, designed in one piece monobloc, which provides excellent protection for inside electrical and electronic components
Also it has IP66 sealing and IK10 maximum possibleresistance.

FOR MORE INFORMATION CLICK HERE

APPLICATIONS

Our Sunbox Series enclosure given its design, finishing and sealing is specially designed for solar photovoltaic, thermal, wind installations and outdoor areas with extreme climatic conditions of rain, wind, dust and corrosion.

OPTIONS

- Custom made based on your needs.
- Available with two doors (from 800x600).
- 170° hinge that allows maximum opening for easy access to the cabinet without removing the door.
- Up to IP69K -DIN 40050-9.
- Supports for a quick installation.
- Manufactured in stainless steel AISI 316L. EN 14404.
- Mounting plate insulator (bakelite) or stainless steel.
- EMC version according to 2014/30/UE of electromagnetic compatibility.

FEATURES

- Supplied covered in protective film which prevents scratches and abrasions during handling.
- The manufacture of the stainless steel monobloc gives perfect sealing and maximum resistance.
- Injected waterproof seal, so moisture can't accumulate.
- Automatic condensation disposal to its unique design.
- The standard control panel comes with double-bit 90° locking handles made of stainless steel.
- Maintenance free for life. Working life of over 30 years.
- Delvalle supplies any measurements required including custom built holes and cut outs both for the door and enclosure.

NORMATIVE

- IP66 (W) rule EN 62208 and EN 60529.
- Maximum IK10 resistance Norm IEC 62208 and EN 50102.
- IEC 60068-2-30 & IEC 60068-2-11.
- Manufactured following EU low voltage ruling 2014/35/UE.
- Compliant RoHS Directive 2011/65/UE.
- UL approval Nema 4x, 12, 3r, 1. N° File E342220.
- Maximum voltage 1000 V.
- Temperature resistant: -40°C +100°C (short time +160°C).
- Option silicone gasket: from -60°C to +180°C (short time up to +350°C).
- Complies to all rulingz for materials intended to come into contact with food EC 1935/2004.

PLAN AND REFERENCES

CLICK HERE TO DOWNLOAD
THE FILES CAD - PLANS - CERTIFICATES

10 YEARS
STAINLESS ANTICORROSIVE **GUARANTEE**

5 YEARS
MECHANICAL PARTS **GUARANTEE**

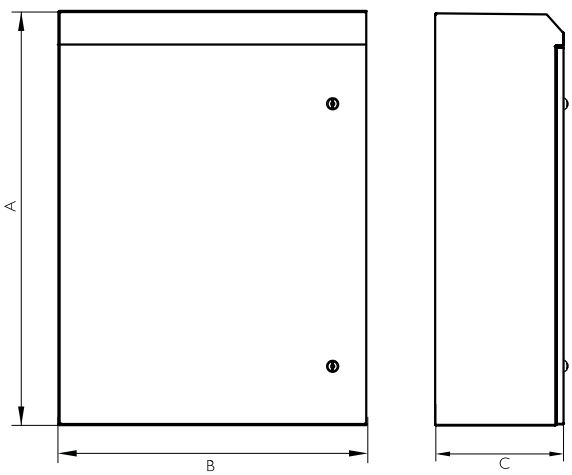

REFERENCES		DIMENSIONS (mm)		
BLIND DOOR	POLYCARBONATE DOOR	HEIGHT -A-	WIDTH -B-	DEPTH -C-
MVAK383015	MVAK383015T	380	300	155
MVAK404021	MVAK404021T	400	400	210
MVAK505021	MVAK505021T	500	500	
MVAK604021	MVAK603815T	600	400	
MVAK705021	MVAK705021T	700	500	
MVAK606021	MVAK606021T	600	600	
MVAK806030	MVAK806030T	800	600	300
MVAK808030	MVAK808030T	800	800	
MVAK108030	MVAK108030T	1000	800	
MVAK128030	MVAK128030T	1200	800	
MVAK101030	MVAK101030T	1000	1000	
Version: Normative UL. Nema		Add "UL" to the reference. Ex. "MVAK383015UL"		

Phone +34 945 601 381
comercial@delvalle.es | www.delvallebox.com

STAINLESS STEEL FIRE EXTINGUISHER ENCLOSURE IP66



Examples



The Main Goal of the Fire Extinguisher Enclosure, is to Provide a Quick and Safe Access to the Extinguishing Equipment

The stainless steel fire extinguisher enclosure IP66(W) is a security equipment to provide a fire extinguisher aimed to users, when they need it in an emergency. Directed to companies such as in food processing, food industry, tunnels,...
It's a perfect equipment when the fire extinguisher needs to be sealed from the outside to avoid dust and contamination.
The main goal of the fire extinguisher enclosure, is to provide a quick and safe access to the extinguishing equipment, before such emergency, with a sloping roof design that avoids the placement on top of materials and bacteria.
The quick access is made with two T closures.

FOR MORE INFORMATION CLICK HERE

APLICATIONS

- Food processing industry
- Tunnel
- White rooms
- Oil & Gas industry
- Petrochemistry
- Industry
- Food industy

STAINLESS STEEL FIRE EXTINGUISHER ENCLOSURE IP66

FEATURES

- Opening of the door at 120 °. Standard opening to the left.
- Transparent polycarbonate door, self-extinguishing according to the fire.
- The fire extinguisher enclosure is a security equipment which has a bracket to support the fire extinguisher. This bracket is secured to the plate to allow a quick use of the extinguishing equipment.
- The fire extinguisher enclosure is installed in enabled tunnel's areas to host the security equipment.
- The sloping roof made design avoids the placement objects on the top of the box. It's has a polished surface finish in vertical direction. The design also avoids the proliferation problems caused from bacteria and virus in the box's surface.
- Hygienic store and water protection.
- It's possible to visualize the security equipment because of the transparent glass screen.
- Fast door access, caused by the two T closures, which allow an easy and simple operation.
- IP66(W) protection.
- It's advisable the use of wall supports.



OPTIONS

- Custom made based on your needs.
- Manufactured in stainless steel AISI 316L EN 14404.
- Transparent glass door.
- It's possible to be wider for two fire extinguishers.
- Up to IP69K -DIN 40050-9.



STAINLESS STEEL FIRE EXTINGUISHER ENCLOSURE IP66

NORMATIVE

- IP66(W) by IEC 60529 rule.
- DIN EN ISO 14 159 Hygienic security to set up the machine function.
- Food industry machine directive (2006/42/CE).
- EHEDG Guideline Hygienic Design apart. 13 of devices for open processes.
- DIN EN 1672-2:2006 Machinery requirements for the food industry.
- Impact resistance IK10, IEC62262.
- Obey with RoHs regulations.
- Food industry rules, materials which are in contact with food (CE 1935/2004).
- Obey with low tension directive 2014/35/UE.
- UL Nema 4x, 12, 3r and 1 certificate upon request. N° File E342220.
- Maximum voltage 1000 V.
- Temperature resistance: From -40 °C to +100 °C (reduced exposure +160 °C).
- Sillicone gasket is optional: From -60 °C to +180 °C (reduced exposure +350 °C).

PLAN AND REFERENCES

CLICK HERE TO DOWNLOAD
THE FILES CAD - PLANS - CERTIFICATES

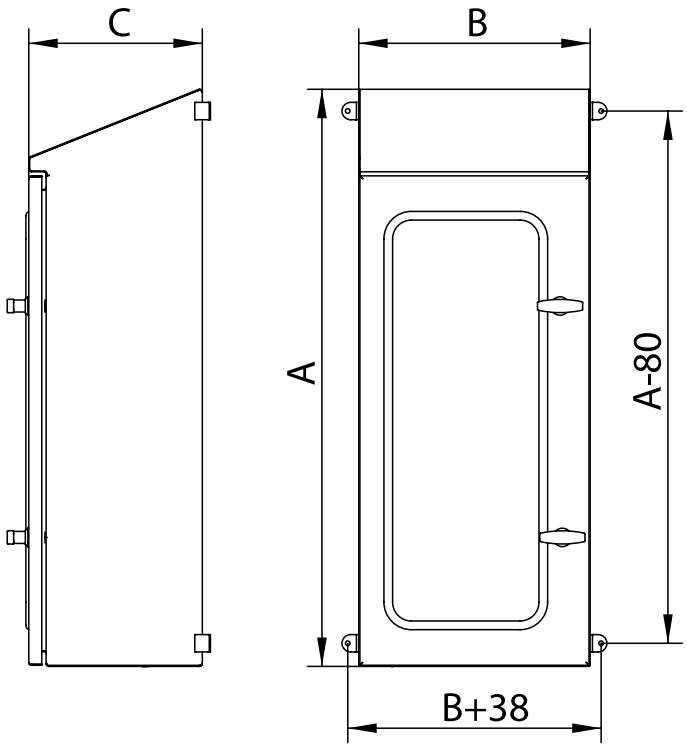

5 YEARS
MECHANICAL PARTS
GUARANTEE

10 YEARS
STAINLESS
ANTICORROSIVE
GUARANTEE

REFERENCE	DIMENSIONS (mm)		
STAINLESS STEEL FIRE EXTINGUISHER ENCLOSURE	HEIGHT -A-	WIDTH -B-	DEPTH -C-
MVAJ.XT104030	1000	400	300

OUTDOOR HEAVY DUTY ELECTRICAL ENCLOSURES



OUTDOOR TELECOM 19 RACK
STORM SERIES IP66



Example

Large Space Inside for Rack Equipments

Outdoor Storm Series enclosure, designed to be placed in urban or interurban areas, protecting the electronic equipment needed for lighting, signage and video surveillance. Its application range is extended with external telecommunication installations, telephones, computers, weather stations and any other application that needs extra protection. The Storm Series is characterized by its high resistance to corrosion and wear, ideal for placement in cities and highways, spacious interior; thanks to its construction, it achieves greater width and height than the rest. Provided with approved water repellent injected seals on exterior doors allowing for tightness and stabilising an ideal temperature for placement in areas of extreme temperature or hostile weather environments. Made of stainless steel AISI 304L (EN 14306) wiyh polyester paint finish, and features a handle made of a material highly resistant to vandalism and forced openings.
The interior design allows easy placement of racks, mounting plates or separators.

FOR MORE INFORMATION CLICK HERE



OUTDOOR TELECOM 19 RACK **STORM SERIES** IP66

APPLICATIONS

Our Storm Series, design, finishing and sealing make it ideal for outdoor use.
As its name suggests its placement is usually on roads, signalling or lighting, and use in weather stations, telecommunications, telephones, fibre optics and video surveillance in urban or interurban areas.

ADVANTAGES

- Very good mechanical properties and high resistance to shape distorsion.
- With water repellent injected seal.
- Door retained with stoppers.
- The enclosure includes anti-vandalism locks and handles suitable for semi-cylindrical profile locks.
- Maintenance free for life over 30 years.
- Delvalle can adapt this design to the measurements required by the client, retaining the fundamentals of insulation, sealing and safety.
- Strength, durability and long life.
- High resistance to vandalism.
- Specially designed for urban and interurban areas, storms or highways.
- High resistance to corrosion and wear.
- Large space inside for rack equipments.
- Two versions: galvanized steel and painted galvanized steel.

OPTIONS

- Designs and pictures available on request.
- Plinths at base for enclosures of any size. They allow enclosures to stand over the floor, with extra room for cable entry. Available 100mm (standard) and 200mm high.
- Stainless steel AISI 316L, EN 1.4404.
- Ventilation KIT (Fan, resistance heating and dual thermostat)
- Graffiti-proof protective paint
- EMC version according to 2014/30/UE of electromagnetic compatibility.

OPTION SUN REFLECTIVE TREATMENT COATING "SUNTERM" FOR OUTDOOR ELECTRICAL ENCLOSURES

SunTerm

SunTerm treatment coating for use in outdoor electrical enclosures, contain a reflective component that deflects the infrared light, and thus the half of the sun's total energy, from any substrate that it coats. As a result, the surface of the substrate, and any interior ambient that it protect, are cooler than a standard coating.

As a treatment solution SunTerm also gives you high corrosion resistant for outdoor environments. Temperature Outdoor Resistant -40°C +80 °C.

Test under lab controlled conditions showed that the aluminum substrate being coated with SunTerm is 7oC cooler than coated with standard coating inside.

Phone +34 945 601 381
comercial@delvalle.es | www.delvallebox.com

OUTDOOR TELECOM 19 RACK STORM SERIES IP66

OUTDOOR FINISH ANTIPOSTER

Outdoor cabinet antiposter, specially designed for public lighting, urban furniture, city hall, shopping centers, buildings...

Its design with rumble strips prevents the sticking of posters. It is also aesthetically more elegant

Available in two materials: aluminium and galvanized steel with epoxy - polyester paint.



Example

COMPONENTS

Delvalle advises in all Storm Series, the following components:

- Roof (standard series)
- Door retainer (optional)
- Plinths at base (optional)
- Rack support (optional)



PLINTHS AT BASE



DOOR RETAINER



ROOF



RACK SUPPORT

VENTILATION KIT

REFERENCE	TR01 AC01

After studying the requirements that our customers demand in ventilation issues, Delvalle includes a kit of accessories consisting of the following elements:

- Roof fan



Temperature variations inside control cabinets and housings, especially when installed outside, lead to condensation of water and consequently to malfunction and corrosion

- Resistance heating



Placing a fan at the top of the cabinet brings a continuous ow of air inside

- Dual thermostat



The electromechanical humidistat which automatically controls the humidity inside the electrical panels, sends the signal to the fan or heater

OUTDOOR TELECOM 19 RACK **STORM SERIES** IP66





10 YEARS
STAINLESS ANTICORROSIVE **GUARANTEE**

FLAT AND VENTILATED ROOF OR SEALED OPTION

5 YEARS
MECHANICAL PARTS **GUARANTEE**

NORMATIVE

- From IP54 to IP65 Norm EN 62208 and EN 60529.
- Maximum IK10 resistance Norm IEC 62208 and EN 50102.
- En 61969-3 Mechanical Structures for Electronic Equipment - outdoor enclosures -.
- IEC 60068-2-30 and IEC 60068-2-11.
- Built to CE standards. 2014/35/UE.
- UL Nema 4x, 12, 1, 3r by request. Nº File E342220.
- Shock resistant against sharp objects EN 60439-5.
- RoHs compliant.
- Maximum voltage 1000 V.
- Temperature resistant: -40°C +100°C (short time +160°C).
- Option silicone gasket: from -60°C to +180°C (short time up to +350°C).

OUTDOOR TELECOM 19 RACK STORM SERIES IP66

PLAN

CLICK HERE TO DOWNLOAD
THE FILES CAD - PLANS - CERTIFICATES

FRONT DOOR

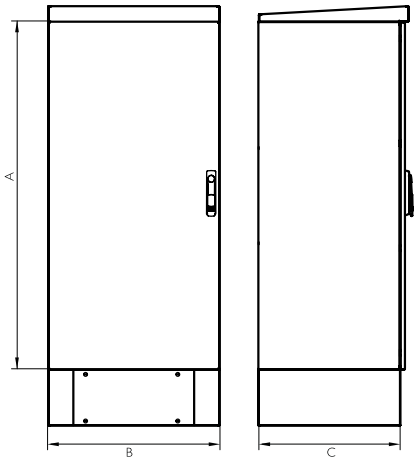

SELF-COOLED AND WITH VENTILATION BRACKETS



FRONT AND REAR DOOR

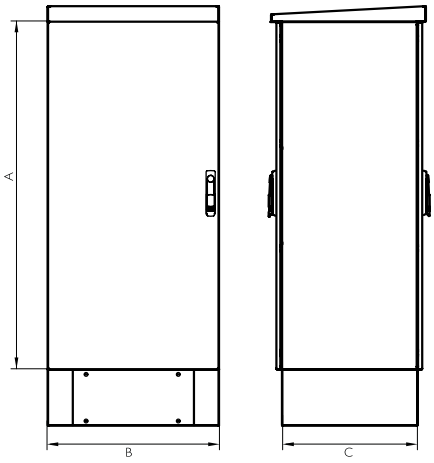

REFERENCES

REFERENCES		DIMENSIONS (mm)			
STAINLESS STEEL	STAINLESS STEEL FRONT AND REAR DOOR	HEIGHT -A-	WIDTH -B-	DEPTH -C-	RACKS
RD606040	RD606040P	600	600	400	12 U
RD606050	RD606050P			500	
RD606060	RD606060P			600	
RD606080	RD606080P			800	
RD126040	RD126040P	1200		400	24 U
RD126050	RD126050P			500	
RD126060	RD126060P			600	
RD126080	RD126080P			800	
RD146040	RD146040P	1450		400	30 U
RD146050	RD146050P			500	
RD146060	RD146060P			600	
RD146080	RD146080P			800	
RD148040	RD148040P		800	400	
RD148050	RD148050P			500	
RD148060	RD148060P			600	
RD148080	RD148080P			800	
RD196040	RD196040P	1900	600	400	40 U
RD196050	RD196050P			500	
RD196060	RD196060P			600	
RD196080	RD196080P			800	
RD198040	RD198040P		800	400	
RD198050	RD198050P			500	
RD198060	RD198060P			600	
RD198080	RD198080P			800	

OUTDOOR ENCLOSURES IN DESERT AREAS
DESERT SERIES IP66



Examples



Waterproof and Auto-Refrigerated. Protect from the Solar Rays the Enclosure Inside without Increasing the Temperature

Desert enclosure has been designed to outdoor in desert areas, and/or when we need a protection inside enclosure against solar rays of this way, we reduce the inside temperature of the cabinet up to 50%.
The Desert enclosure reduces by up to 90% of direct solar radiation, lengthening and protecting the lifetime of your electronics components.
Doesn't require refrigeration, reducing the power consumption, reducing the maintenance of equipment and diminish considerably the operator's repair and spare parts costs.
Besides, its innovative design enables obtained a natural airflow in all surfaces of enclosure without additional fans.

FOR MORE INFORMATION CLICK HERE



OUTDOOR ENCLOSURES IN DESERT AREAS **DESERT SERIES** IP66

APPLICATIONS

Specially designed for outdoor desert areas with high incidence of solar light.

- Desert zones.
- Railway lines.
- Harbor areas
- Agricultural areas.



TECHNICAL FEATURES

Robust enclosure manufactured in galvanized Steel painted in 7035 or AISI 304L.
Manufactured in monobloc gives 100% sealing and maximum corrosive resistance. Suitable for harsh environments.
Designed with sunshades in all surfaces to avoid the direct solar radiation.

ADVANTAGES

- Suitable for desert areas or areas with high solar radiation.
- Protected against dust, sand and inclement weather.
- Doesn't require refrigeration nor ventilation.
- Reduces by up to 90% of direct solar radiation
- Waterproof IP66, inside is protected of dust, rain,...
- Free maintenance.

OPTIONS

- Option sun reflective treatment coating "Sunterm" for outdoor electrical enclosures.
- Possibility of two doors.
- Three materials:
  - Galvanized Steel painted in RAL 7035.
  - In AISI3L04 or AISI316L for aggressive environments.
  - Aluminum in enclosures needs more internal cooling.
- Wide range of accessories, plinth, Wall supports, roofs,...
- Custom made based on your needs.
- Door stopper.
- Safety lock, with key,...
- Thermal studies are carried out on request.

OUTDOOR ENCLOSURES IN DESERT AREAS **DESERT SERIES** IP66

DESERT LUXOR DESIGNS



DESIGN IP66
Single door enclosure





DESIGN IP66
Double door design with upright





DESIGN IP55
Double door design without upright

DELVALLE DEVELOPS ALL DIFFERENT KINDS OF MODELS TO COVER NEEDS



OUTDOOR ENCLOSURES IN DESERT AREAS **DESERT SERIES** IP66

DESERT TRIBECA DESIGNS



DESIGN IP66
Single door enclosure





DESIGN IP66
Double door design with upright





DESIGN IP55
Double door design without upright

DELVALLE DEVELOPS ALL DIFFERENT KINDS OF MODELS TO COVER NEEDS

NORMATIVE

- IP66, Norm IEC 60529-2004.
- IK10, Norm IEC 62262-2002.
- En 61969-3 Mechanical Structures for Electronic Equipment – outdoor enclosure.
- IEC 60068-2-30 and IEC 60068-2-11.
- Built to CE Standards. 2014/35/UE.
- UL approval. N° File E342220.
- Shock resistant against sharp objects EN 60439-5.
- Maximum voltage 1000 V.
- Temperatur resistant: -40°C +100°C (Short time +160°C).
- Fixing equipment DIN 41494 and IEC 297 to 19-inch rack.
- Fixing equipment IEC 917 (to ETSI or Metric 515m/m).
- Electromagnetic compatibility EMC and RFI (IP55).
- Electromagnetic protection IEC TS 61587-3 (IP55).

OUTDOOR ENCLOSURES IN DESERT AREAS **DESERT SERIES** IP66

PLAN ET REFERENCES 1 DOOR DESERT LUXOR

CLICK HERE TO DOWNLOAD
THE FILES CAD - PLANS - CERTIFICATES

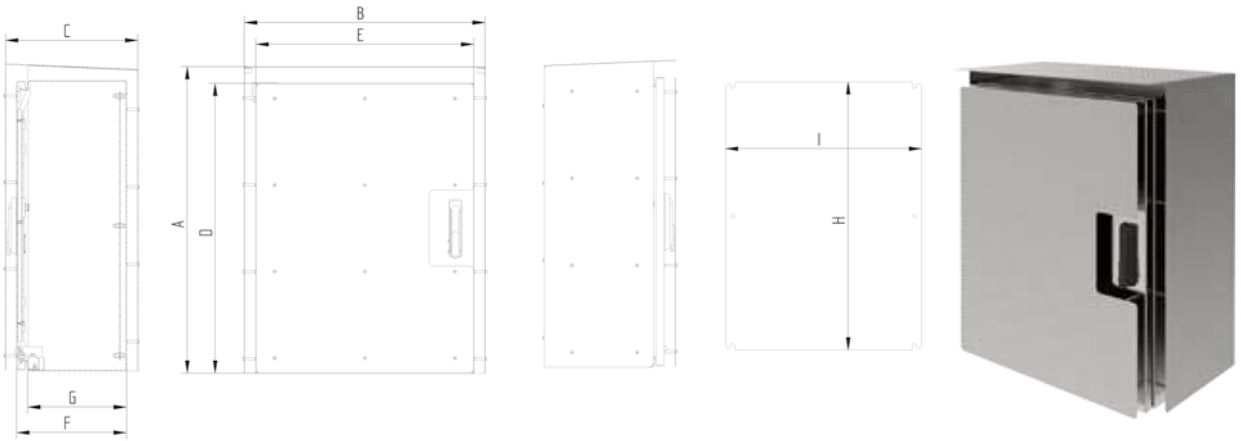

REFERENCE	DIMENSIONS (mm) OUTDOOR ENCLOSURES DESERT LUXOR IP66								
ONE DOOR DESERT LUXOR	HEIGHT -A-	WIDTH -B-	DEPTH -C-	INSIDE HEIGHT -D-	INSIDE WIDTH -E-	INSIDE DEPTH -F-	ACCESS	INSIDE USEFUL DEPTH -G-	PLAQUE MEASUREM. -HxI-
MVAB645627SOL	645	563	273	600	500	210	560x453	180	565x445
MVAB646627SOL	645	663	273	600	600	210	560x553	180	565x545
MVAB846636SOL	845	663	363	800	600	300	760x553	270	765x545
MVAB848636SOL	845	863	363	800	800	300	760x753	270	765x745
MVAB108636SOL	1045	863	363	1000	800	300	960x753	270	965x745
MVAB128636SOL	1245	863	363	1200	800	300	1160x753	270	1165x745
MVAB101036SOL	1045	1063	363	1000	1000	300	960x953	270	965x945
MVAB121036SOL	1245	1063	363	1200	1000	300	1160x953	270	1165x945
MVAB121236SOL	1245	1263	363	1200	1200	300	1160x1153	270	1165x1145
MVAB101236SOL	1045	1263	363	1000	1200	300	960x1153	270	965x1145

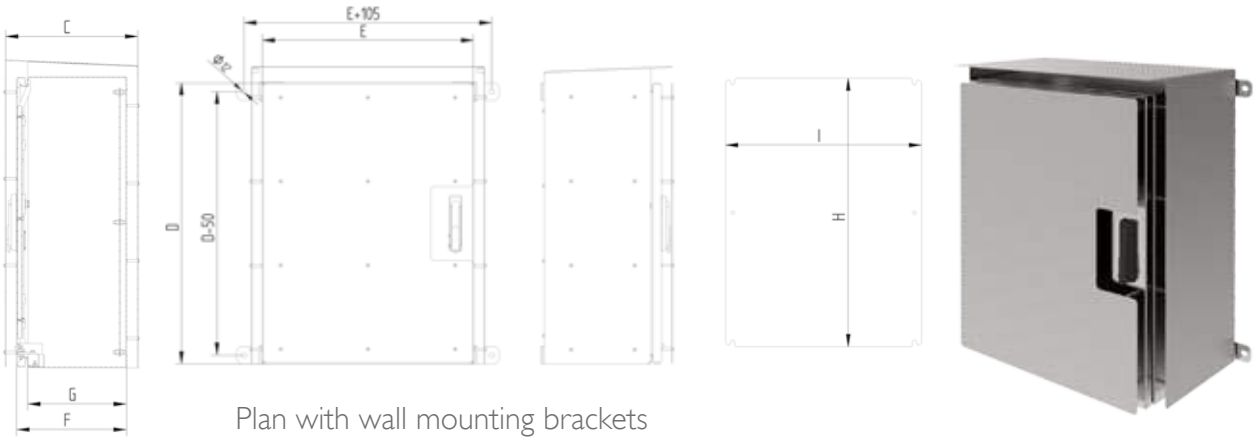

Plan with wall mounting brackets

OUTDOOR ENCLOSURES IN DESERT AREAS **DESERT SERIES** IP66



DESIGN IP55

CUSTOM TO MEASURE

5 YEARS
MECHANICAL PARTS **GUARANTEE**



DESIGN IP66

PLAN ET REFERENCES 2 DOORS DESERT LUXOR

CLICK HERE TO DOWNLOAD THE FILES CAD - PLANS - CERTIFICATES

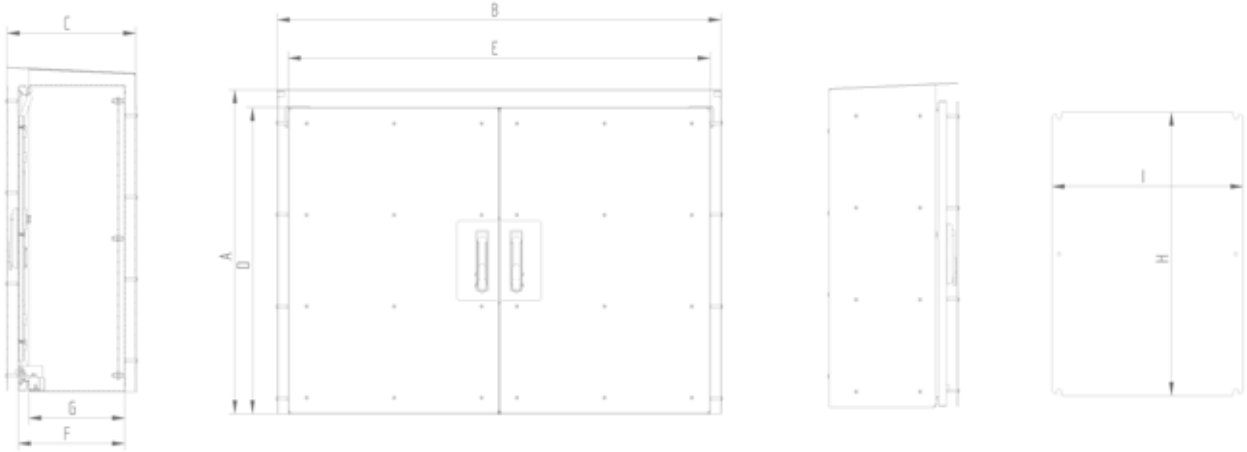

REFERENCE	DIMENSIONS (mm) OUTDOOR ENCLOSURES DESERT LUXOR IP66								
TWO DOORS DESERT LUXOR	HEIGHT -A-	WIDTH -B-	DEPTH -C-	INSIDE HEIGHT -D-	INSIDE WIDTH -E-	INSIDE DEPTH -F-	ACCESS	INSIDE USEFUL DEPTH -G-	*PLAQUES MEASUREM. -HxI-
MVAB846636DSOL	845	663	363	800	600	300	746x246	270	740x240
MVAB848636DSOL	845	863	363	800	800	300	746x346	270	740x340
MVAB108636DSOL	1045	863	363	1000	800	300	946x346	270	940x340
MVAB128636DSOL	1245	863	363	1200	800	300	1146x346	270	1140x340
MVAB101036DSOL	1045	1063	363	1000	1000	300	946x446	270	940x440
MVAB121036DSOL	1245	1063	363	1200	1000	300	1146x446	270	1140x440
MVAB121236DSOL	1245	1263	363	1200	1200	300	1146x546	270	1140x540
Opcion: IP66	Add "66" to the reference. Ex "MVAB121236DSOL66"								

* Enclosure with two plaques

OUTDOOR ENCLOSURES IN DESERT AREAS **DESERT SERIES** IP66



CUSTOM TO MEASURE

5 YEARS
MECHANICAL PARTS **GUARANTEE**



PLAN ET REFERENCES 1 DOOR DESERT TRIBECA

CLICK HERE TO DOWNLOAD THE FILES CAD - PLANS - CERTIFICATES

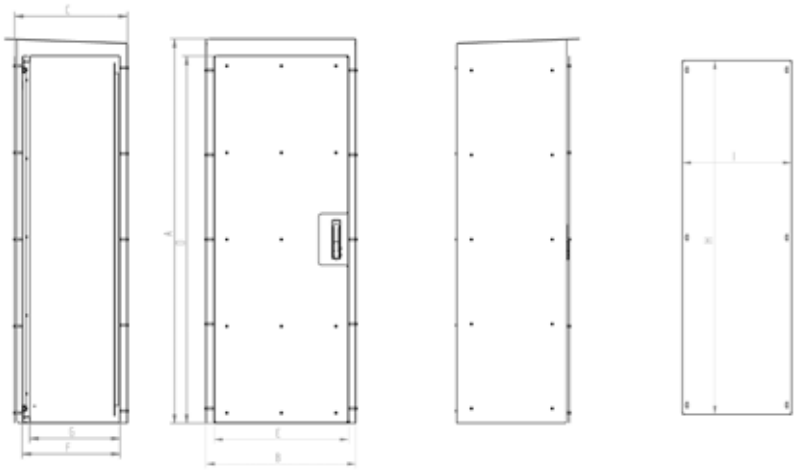

REFERENCE	DIMENSIONS (mm) OUTDOOR ENCLOSURES DESERT TRIBECA IP66								
ONE DOOR DESERT TRIBECA	HEIGHT -A-	WIDTH -B-	DEPTH -C-	INSIDE HEIGHT -D-	INSIDE WIDTH -E-	INSIDE DEPTH -F-	ACCESS	INSIDE USEFUL DEPTH -G-	PLAQUE MEASUREM. -HxI-
MVAC176646SOL	1700	663	463	1650	600	400	1540x490	375	1520x470
MVAC178646SOL	1700	863	463	1650	800	400	1540x690	375	1520x670
MVAC171046SOL	1700	1063	463	1650	1000	400	1540x890	375	1520x870
MVAC171246SOL	1700	1263	463	1650	1200	400	1540x1090	375	1520x1070
MVAC186646SOL	1850	663	463	1800	600	400	1690x490	375	1670x470
MVAC188646SOL	1850	863	463	1800	800	400	1690x690	375	1670x670
MVAC188656SOL	1850	863	563	1800	800	500	1690x690	475	1670x670
MVAC181046SOL	1850	1063	463	1800	1000	400	1690x890	375	1670x870
MVAC181056SOL	1850	1063	563	1800	1000	500	1690x890	475	1670x870
MVAC206656SOL	2050	663	563	2000	600	500	1890x490	475	1870x470
MVAC208646SOL	2050	863	463	2000	800	400	1890x690	375	1870x670
MVAC208656SOL	2050	863	563	2000	800	500	1890x690	475	1870x670
MVAC201046SOL	2050	1063	463	2000	1000	400	1890x890	375	1870x870
MVAC201056SOL	2050	1063	563	2000	1000	500	1890x890	475	1870x870

OUTDOOR ENCLOSURES IN DESERT AREAS **DESERT SERIES** IP66



DESIGN IP55

CUSTOM TO MEASURE

5 YEARS
MECHANICAL PARTS **GUARANTEE**



DESIGN IP66

PLAN ET REFERENCES 2 DOORS DESERT TRIBECA

CLICK HERE TO DOWNLOAD THE FILES CAD - PLANS - CERTIFICATES

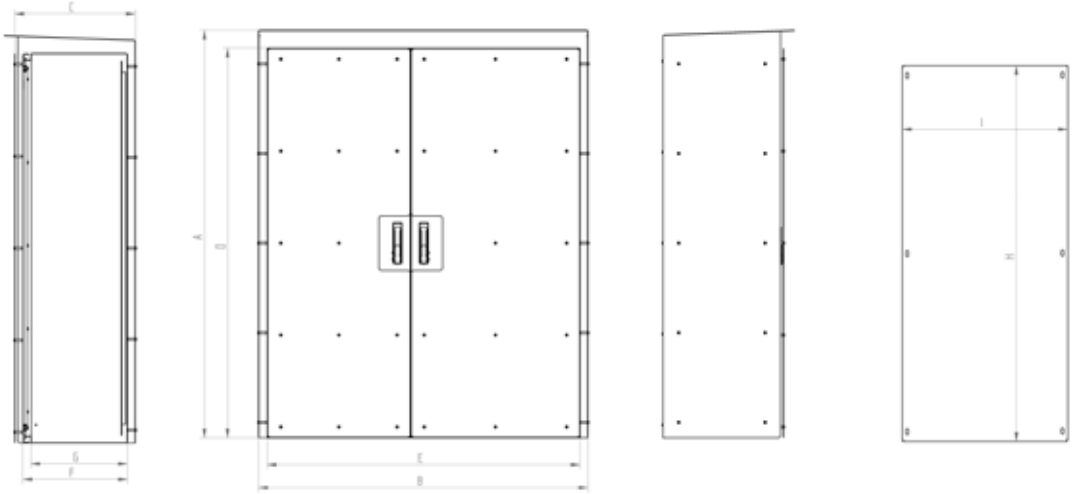

REFERENCE	DIMENSIONS (mm) OUTDOOR ENCLOSURES DESERT TRIBECA IP66								
TWO DOORS DESERT TRIBECA	HEIGHT -A-	WIDTH -B-	DEPTH -C-	INSIDE HEIGHT -D-	INSIDE WIDTH -E-	INSIDE DEPTH -F-	ACCESS	INSIDE USEFUL DEPTH -G-	*PLAQUE MEASUREM. -HxI-
MVAC181246SOL	1850	1263	463	1800	1200	400	1690x490	375	1670x470
MVAC181256SOL	1850	1263	563	1800	1200	500	1690x490	475	1670x470
MVAC201246SOL	2050	1263	463	2000	1200	400	1890x490	375	1870x470
MVAC201256SOL	2050	1263	563	2000	1200	500	1890x490	475	1870x470
MVAC201446SOL	2050	1463	463	2000	1400	400	1890x590	375	1870x570
MVAC201456SOL	2050	1463	563	2000	1400	500	1890x590	475	1870x570
MVAC201646SOL	2050	1663	463	2000	1600	400	1890x690	375	1870x670
MVAC201656SOL	2050	1663	563	2000	1600	500	1890x690	475	1870x670
Opcion: IP66	Add "66" to the reference. Ex "MVAC201656SOL66"								

* Enclosure with two plaques

OUTDOOR RACK WITH DOUBLE WALL
TORNADO SERIES IP66



Example

Large Space Inside for Rack Equipments

Cabinet with or without 19" or 21" rack system, especially designed for outdoor use: thermo-insulated and self-cooling double wall for better protection of the electronics, servers, CCTV, telecommunications, voice, data, fibre optics,... Ideal for protecting electronic equipment against temperature change. Fitted anti-insect grille to stop flies entering the cabinets.
The interior design allows easy placement of racks, mounting plates, trays, dividers, ... Equipped with a removable tray for easy cable entry and hole cutting. Includes socket 100 mm, 19 " frame rack, polyester paint finish (RAL 7035) resistant to corrosion and weathering.
Anti-vandalism handle made of black duralumin with a key lock.

FOR MORE INFORMATION CLICK HERE



OUTDOOR RACK WITH DOUBLE WALL **TORNADO SERIES** IP66

APPLICATIONS

Ideal for outdoor computer placement, weather stations, telecommunications, CTV, ETSI, fibre optics, security and video surveillance, traffic light controls, street lighting or any other application that needs extra outdoor protection.
For outdoor use in areas experiencing extreme temperatures or harsh environments. External placement:

- Areas with extreme temperatures or hostile environments.
- Desert areas, tropical, high mountain.

ADVANTAGES

- The best system of telecommunication rack cabinets on the market.
- Earthquake and vibration control.
- Thermo insulated and self-cooled.
- Approved water resistant sealing and UL certified, on exterior doors.
- Maximum security against vandalism and lever forced opening.
- Anti-vandalism socket.
- Maximum insulation capacity.
- Especially designed for telecomunications, telephone, fibre optics and public lighting.
- Double thermal proof walls.
- Highly resistant to vandalism.

TECHNICAL FEATURES

- Material: stainless steel, aluminium or galvanized.
- Rack colour: grey RAL 7035. Also other colours on request.
- Height: from 1185 mm to 1585 mm (other sizes on request).
- Width: 600 mm and 800 mm. (other sizes on request).
- Depth: 600 mm and 800 mm (other sizes on request).
- Rack height: height : 20 u, 25 u and 30 u.
- Sealing: from IP43 to IP66.
- Packing unit: 1.
- Front door: metal with anti-vandalism handle.
- Cable entry: from below.

MATERIALS

- Aluminium outdoor rack: improves cooling and is lighter (2 mm).
- Galvanized outdoor rack: a cheaper alternative.
- Stainless Steel outdoor rack: consult details and prices.

OUTDOOR RACK WITH DOUBLE WALL TORNADO SERIES IP66

OPTIONS

- Delvalle can design a specific solution to the client's requirements while retaining thefundamentals of thermal insulation, sealing, safety and easy installation.
- 19" or 21", depending on rack support position.



OPTION SUN REFLECTIVE TREATMENT COATING "SUNTERM" FOR OUTDOOR ELECTRICAL ENCLOSURES

SunTerm

SunTerm treatment coating for use in outdoor electrical enclosures, contain a reflective component that deflects the infrared light, and thus the half of the sun's total energy, from any substrate that it coats. As a result, the surface of the substrate, and any interior ambient that it protect, are cooler than a standard coating.

As a treatment solution SunTerm also gives you high corrosion resistant for outdoor environments.

Temperature outdoor resistant -40°C +80°C.

Test under lab controlled conditions showed that the aluminum substrate being coated with SunTerm is 7oC cooler than coated with standard coating inside.

AIR MOVEMENT INSIDE THE CABINET

- Standard front ventilation cabinet



- Cabinet with extra ventilation (front and back)

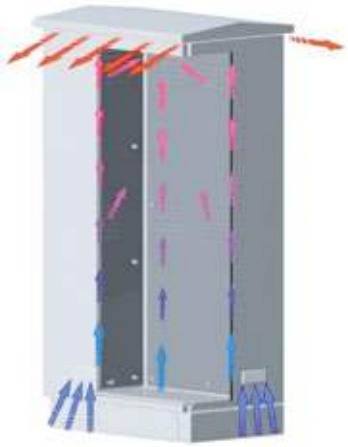

- Cabinet with extra ventilation (four sides)

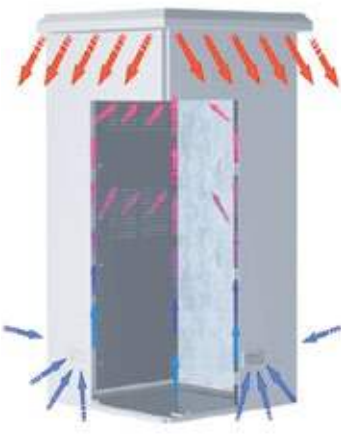

Phone +34 945 601 381
comercial@delvalle.es | www.delvallebox.com

OUTDOOR RACK WITH DOUBLE WALL **TORNADO SERIES** IP66

OUTDOOR FINISH ANTIPOSTER

Outdoor cabinet antiposter, specially designed for public lighting, urban furniture, city hall, shopping centers, buildings...

Its design with rumble strips prevents the sticking of posters. It is also aesthetically more elegant

Available in two materials: aluminium and galvanized steel with epoxy - polyester paint.



Example

ACCESORIES

- Rack suport

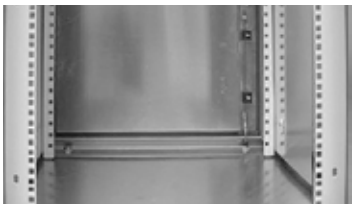

The design of our cabinet means 19" or 21"profiles can be fitted inside as well as the desired components.

- Fan

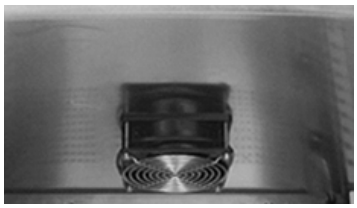

Placing a fan at the top of the cabinet brings a continuous flow of air inside.

- Sockets



The anti-vandalism socket, especially designed for this model, prevents access to the cabinet and robbery.

- Diffusers

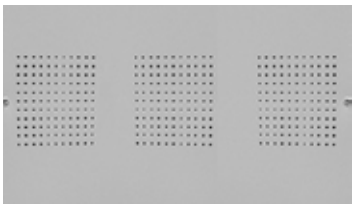

For a perfectly controlled circulation of air inside, both walls and doors incorporate diffusers.

- Roof



With three models of roof we cover all needs to achieve air evacuation, from a simple front, front and rear and finally one from all four sides.

- Brackets



Simple side brackets, coupled with an anti-insect screen, allows the entry of air and prevents the passage of anything larger than 1mm²

TR01 AC01	Ventilation Kit	MVRACM	Heaters (Up to 2000 W). Contact us for further information.
MVSR	Trays	CONSULTAR	Canopies with extra ventilation
MVRT01	Door stop	TROPICO SERIES	Air-conditioning (recommended to obtain a constant temperature)

OUTDOOR RACK WITH DOUBLE WALL **TORNADO SERIES** IP66

VENTILATION KIT

REFERENCE	TR01 AC01

After studying the requirements that our customers demand in ventilation issues, Delvalle includes a kit of accessories consisting of the following elements:

- Roof fan



- Resistance heating



- Dual thermostat



NORMS

- From IP43 to IP66 . Norm IEC EN 62208 and EN 60529/10.91.
  - IP43 with ventilation brackets
  - IP54 with vent grille
  - IP66 without ventilation
- 2014/35/UEEN 50102
- Maximum voltage 1000 V
- UL Nema 4x, 12, 1, 3r by request. N° File E342220.
- Several options in roof ventilation 200 mm plinth at base.
- EN61969-3 Mechanical structures for electronic equipment and outdoor enclosures.
- Possibility of including air conditioning equipment attached to one side or the roof.
- Can also be suppled without a frame rack but with trays.
- Handle with lock.ing system. Available with 1 or 2 doors.
- The tray can includes micro cuts for later placement of different options.

10 YEARS
STAINLESS ANTICORROSIVE **GUARANTEE**

5 YEARS
MECHANICAL PARTS **GUARANTEE**

Phone +34 945 601 381
comercial@delvalle.es | www.delvallebox.com

OUTDOOR RACK WITH DOUBLE WALL **TORNADO SERIES** IP66

PLAN AND REFERENCES 1 DOOR

CLICK HERE TO DOWNLOAD
THE FILES CAD - PLANS - CERTIFICATES

FRONT VIEW

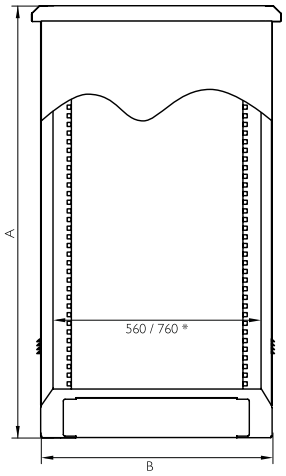

SIDE VIEW

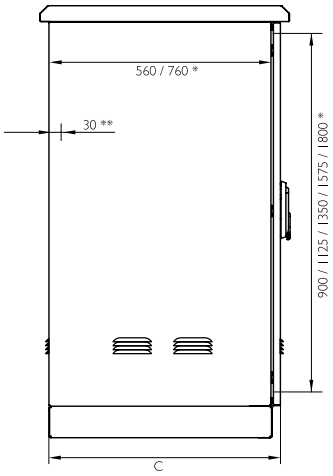

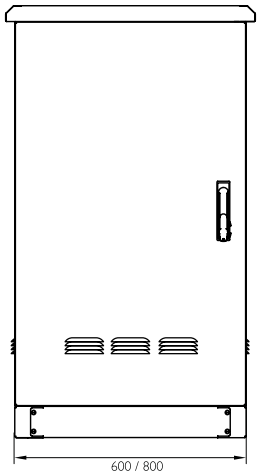

*Internal dimensions

**Internal dimensions for two door cabinets

REFERENCES - MATERIALS			DIMENSIONS (mm)						
STAINLESS STEEL	ALUMINIUM	GALVANIZED	DESCRIPTION	HEIGHT (A)	WIDTH (B)	DEPTH (C)	DOUBLE DOOR MACHINABLE AREA	LATERAL MACHINABLE AREA	PLATE MEASURES
TR116080	TRAL116080	TRG116080	TORNADO 20 U	1185	600	800	905x430	925x715	965x530
TR116060	TRAL116060	TRG116060	TORNADO 20 U	1185	600	600	905x430	925x515	965x530
TR118080	TRAL118080	TRG118080	TORNADO 20 U	1185	800	800	905x630	925x715	965x730
TR118060	TRAL118060	TRG118060	TORNADO 20 U	1185	800	600	905x630	925x515	965x730
TR136080	TRAL136080	TRG136080	TORNADO 25 U	1385	600	800	1105x430	1125x715	1165x530
TR136060	TRAL136060	TRG136060	TORNADO 25 U	1385	600	600	1105x430	1125x515	1165x530
TR138080	TRAL138080	TRG138080	TORNADO 25 U	1385	800	800	1105x630	1125x715	1165x730
TR138060	TRAL138060	TRG138060	TORNADO 25 U	1385	800	600	1105x630	1125x515	1165x730
TR156080	TRAL156080	TRG156080	TORNADO 30 U	1585	600	800	1305x430	1325x715	1165x730
TR156060	TRAL156060	TRG156060	TORNADO 30 U	1585	600	600	1305x430	1325x515	1165x730
TR158080	TRAL158080	TRG158080	TORNADO 30 U	1585	800	800	1305x630	1325x715	1365x530
TR158060	TRAL158060	TRG158060	TORNADO 30 U	1585	800	600	1305x630	1325x515	1365x530
TR186080	TRAL186080	TRG186080	TORNADO 35 U	1885	600	800	1555x430	1575x715	1615x530
TR186060	TRAL186060	TRG186060	TORNADO 35 U	1885	600	600	1555x430	1575x515	1615x530
TR188080	TRAL188080	TRG188080	TORNADO 35 U	1885	800	800	1555x630	1575x715	1615x730
TR188060	TRAL188060	TRG188060	TORNADO 35 U	1885	800	600	1555x630	1575x515	1615x730
TR206080	TRAL206080	TRG206080	TORNADO 40 U	2060	600	800	1780x430	1800x715	1840x530
TR206060	TRAL206060	TRG206060	TORNADO 40 U	2060	600	600	1780x430	1800x515	1840x530
TR208080	TRAL208080	TRG208080	TORNADO 40 U	2060	800	800	1780x630	1800x715	1840x730
TR208060	TRAL208060	TRG208060	TORNADO 40 U	2060	800	600	1780x630	1800x515	1840x730
Version Norme UL			Add "UL" to reference. Ex: "TR208080UL"						
Version Rear Door			Add code letter P to reference. Ex: "TR208080P"						

Separation depth plate 20mm

RACK DE INTEMPERIE DOBLE PARED SERIE TORNADO IP66

PLAN AND REFERENCES 2 DOORS

CLICK HERE TO DOWNLOAD
THE FILES CAD - PLANS - CERTIFICATES

SIDE VIEW

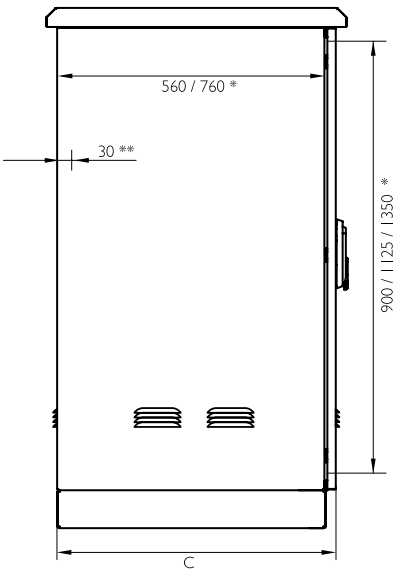

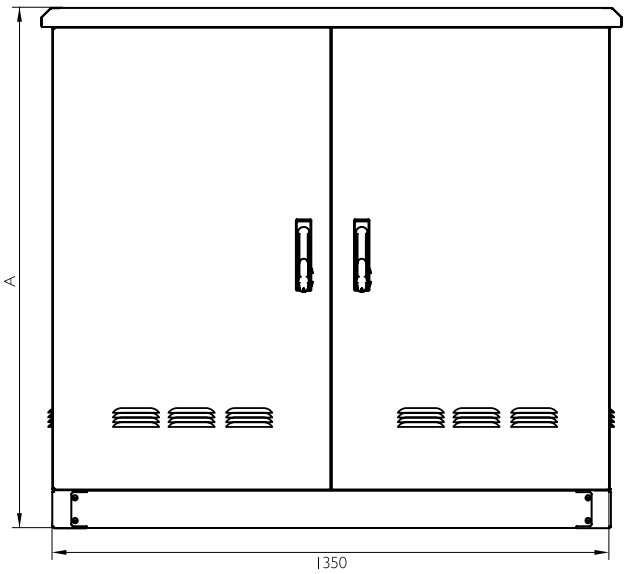

REFERENCES

REFERENCES - MATERIALS			DIMENSIONS (mm)			
STAINLESS STEEL	ALUMINIUM	GALVANIZED	DESCRIPTION	HEIGHT (A)	WIDTH (B)	DEPTH (C)
TR111380D	TRAL111380D	TRG111380D	TORNADO 20 U	1160	1350	800
TR111360D	TRAL111360D	TRG111360D				600
TR131380D	TRAL131380D	TRG131380D	TORNADO 25 U	1385		800
TR131360D	TRAL131360D	TRG131360D				600
TR161380D	TRAL161380D	TRG161380D	TORNADO 30 U	1610		800
TR161360D	TRAL161360D	TRG161360D				600
TR181380D	TRAL181380D	TRG181380D	TORNADO 35 U	1835		800
TR181360D	TRAL181360D	TRG181360D				600
Version Norme UL			Add "UL" to reference. Ex: "TR208080UL"			

* Standard dimensions (any rack can be custom made to meet needs)



OUTDOOR ENCLOSURE **TROPICO SERIES** IP66



Example

Water Repellent Injected Seal

The Tropico Series enclosure for outdoor and street lighting made of stainless AISI 304L or galvanized and painted steel.
Robust, developed and designed for outdoor, use with an embedded door, triple action above all rotation anti-vandalism handle and waterproof seal approved CE, UL.
Achieves a sealing IP66, and the maximum possible resistance IK10.
Attached selfventilating roof and optional plinth together with embedded door make it vandal proof.

FOR MORE INFORMATION CLICK HERE



OUTDOOR ENCLOSURE TROPICO SERIES IP66

APPLICATIONS

Our outdoor Tropico Series enclosures, have a design, finishing and sealing especially for telecommunications, street lighting, railway lines to hold and protect all electrical and electronic equipment, in the rail sector, urban city cabinets and telecommunications (ICT), TV, RDSI, RT, TB, TLCA.



OPTIONS

- Varying design and painting available on request.
- Plinths at base for enclosures of any size. They allow enclosures to stand above the floor, with extra room for cable entry. Available as 100mm (standard) and 200mm high.
- Manufactured in stainless steel AISI 316L, EN 1.4404.
- Fasteners and widthrs for ground fixing.
- Graffiti-proof protective paint
- Insulating mounting plate (bakelite) or in stainless steel.
- EMC version according to 2014/30/UE of electromagnetic compatibility.

ADVANTAGES

- Excellent mechanical properties and high resistance too.
- Water repellent injected seal.
- Automatic condensation evacuation.
- The enclosure includes anti-vandalism locks and handles, adapted for electric and gas company locking systems.
- Maintenance free for life, over 30 years.
- Delvalle makes to order any pre-cut units for your needs, including holes, channels, both in the door and in the enclosure itself.



OUTDOOR ENCLOSURE TROPICO SERIES IP66

OPTION SUN REFLECTIVE TREATMENT COATING "SUNTERM" FOR OUTDOOR ELECTRICAL ENCLOSURES

SunTerm treatment coating for use in outdoor electrical enclosures, contain a reflective component that deflects the infrared light, and thus the half of the sun's total energy, from any substrate that it coats.

As a result, the surface of the substrate, and any interior ambient that it protect, are cooler than a standard coating.

As a treatment solution SunTerm also gives you high corrosion resistant for outdoor environments.

Temperature Outdoor Resistant -40°C +80 °C.

Test under lab controlled conditions showed that the aluminum substrate being coated with SunTerm is 7oC cooler than coated with standard coating inside.

PLACEMENT OF OUTDOOR CABINETS

As can be seen in the picture, as an option, the plinth allows it to be fully fixed to ground movements so avoiding.



Detail of plinths with mounting frame



Detail of inclined plinths with mounting frame

OUTDOOR FINISH ANTIPOSTER

Outdoor cabinet antiposter, specially designed for public lighting, urban furniture, city hall, shopping centers, buildings...

Its design with rumble strips prevents the sticking of posters. It is also aesthetically more elegant

Available in two materials: aluminium and galvanized steel with epoxy - polyester paint.



Example

OUTDOOR ENCLOSURE TROPICO SERIES IP66

DESIGNS



BASIC DESIGN
Single door cabinet with hood, plinths and vents.
Especially designed for: public lighting, advertising panels, festivals, christmas lights, and traffic light controls.



2 DOOR DESIGN
Double door design up to IP65, anti-vandal lock and plinths (300 mm).
Perfect for connection, measurement, controls and protection modules.



3 DOOR DESIGN
Triple door design up to IP65, with anti-vandal locking, side screens and plinths (300 mm). Ideal for connection, measurement, controls and protection modules.



DELVALLE DEVELOPS ALL DIFFERENT KINDS OF MODELS TO COVER NEEDS, VARYING IN SIZE AND IN THE NUMBER OF DOORS, BOTH FRONT AND SIDE

VENTILATION KIT

REFERENCE	TR01 AC01

After studying the requirements that our customers demand in ventilation issues, Delvalle includes a kit of accessories consisting of the following elements:

- Roof fan



- Resistance heating



- Dual thermostat



OUTDOOR ENCLOSURE TROPICO SERIES IP66

NORMATIVE

- IP66 Norm EN 62208 and EN 60529.
- Maximum IK10 hit resistance Norm IEC 62262.
- IEC 60068-2-30 and IEC 60068-2-11.
- Built to CE standard 2014/35/UE.UL Nema 4x, 12, 1, 3r by request. N°File E342220.
- Resistant to impact sharp objects according to EN 60439-5.
- Maximum voltage 1000 V.
- Temperature resistant: -40°C +100°C (short time +160°C).
- Option silicone gasket: from -60°C to +180°C (short time up to +350°C).

10 YEARS
STAINLESS ANTICORROSIVE **GUARANTEE**

5 YEARS
MECHANICAL PARTS **GUARANTEE**

PLAN

CLICK HERE TO DOWNLOAD
THE FILES CAD - PLANS - CERTIFICATES

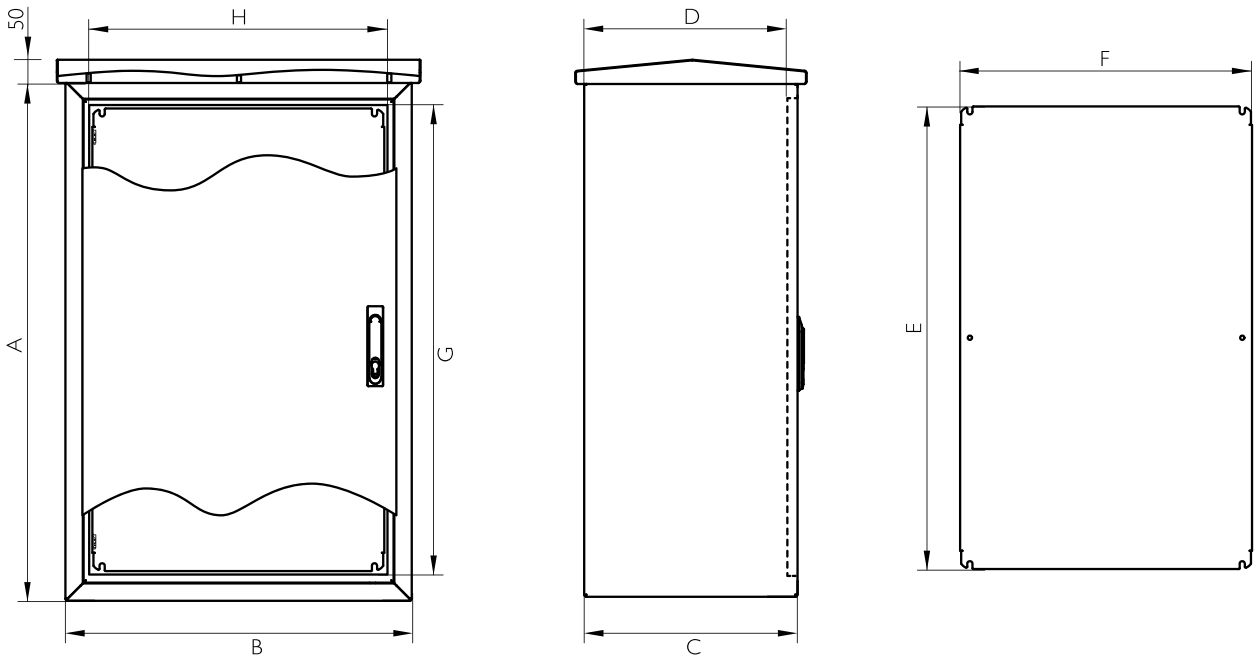

OUTDOOR ENCLOSURE TROPICO SERIES IP66

REFERENCES

REFERENCES	DIMENSIONS (mm)								
REFERENCE	HEIGHT -A-	WIDTH -B-	DEPTH -C-	ACCESS -GxH-	INSIDE DEPTH -D-	MACHINABLE AREA		PLAQUE MEASUREM. -ExF-	DOORS NUMBER
						DOOR	LATERAL		
MVAD106032	1000	600	320	883x483	297,5	858.5x412.8	990 x 310	870 x 475	1
MVAD106040			400		377,5		990 x 390		
MVAD106050			500		477,5		990 x 490		
MVAD126032	1200		320	1083x483	297,5	1058.8x412.8	1190 x 310	1070 x 475	
MVAD126040			400		377,5		1190 x 390		
MVAD126050			500		477,5		1190 x 490		
MVAD108032	1000	800	320	883x683	297,5	800x530	990 x 310	870 x 675	
MVAD108040			400		377,5		990 x 390		
MVAD108050			500		477,5		990 x 490		
MVAD128032	1200		320	1083x683	297,5	1000x530	1190 x 310	1070 x 675	
MVAD128040			400		377,5		1190 x 390		
MVAD128050			500		477,5		1190 x 490		
MVAD121032		1000	320	1083x683	297,5	1058.5 x 322.3 and 1058.5 x 255.8	1190 x 310	1070 x 870	2
MVAD121040			400		377,5		1190 x 390		
MVAD121050			500		477,5		1190 x 490		
MVAD101232	1000	1200	320	883x1083	297,5	858.5 x 522.3 and 858.5 x 455.8	990 x 310	870 x 1070	
MVAD101240			400		377,5		990 x 390		
MVAD101250			500		477,5		990 x 490		
MVAD801432	800	1400	320	683x1283	297,5	658.5 x 722.3 and 658.5 x 655.8	790 x 310	670 x 1270	
MVAD101432	1000		320	883x1283	297,5	858.5 x 722.3 and 858.5 x 655.8	990 x 310	870 x 1270	
MVAD101440			400		377,5		990 x 390		
MVAD101450			500		477,5		990 x 490		
MVAD121432	1200		320	1083x1283	297,5	1058.5 x 722.3 and 1058.5 x 655.8	1190 x 310	1070 x 1270	
MVAD121440			400		377,5		1190 x 390		
MVAD121450			500		477,5		1190 x 490		
MVAD141432	1400		320	1283x1283	297,5	1258.5 x 722.3 and 1258.5 x 655.8	1390 x 310	1270 x 1270	
MVAD141440			400		377,5		1390 x 390		
MVAD141450			500		477,5		1390 x 490		
MVAD121632	1200	1600	320	1083x1483	297,5	1000 x 570 and 1000 x 570	1190 x 310	1070 x 1470	
MVAD121640			400		377,5		1190 x 390		
MVAD121650			500		477,5		1190 x 490		
MVAD161832	1600	1800	320	1483x1883	297,5	1458.5 x 438.1	1590 x 310	1470 x 1670	3
MVAD161840			400		377,5		1590 x 390		
MVAD161850			500		477,5		1590 x 490		
MVAD162050		2000		1483x1883		1458.5 x 504.8		1470 x 1870	
MVAD182050	1800			1683x1883		1658.5 x 504.8	1790 x 490	1670 x 1870	
MVAD222050	2200			2083x1883		2058.5 x 504.8	2190 x 490	2070 x 1870	
MVAD122232	1200	2200	320	1083x2083	297,5	1058.5 x 571.4	1190 x 310	1070 x 2070	
MVAD122240			400		377,5		1190 x 390		
MVAD122250			500		477,5		1190 x 490		
MVAD182450	1800	2400		1683x2283		1600 x 555.3	1790 x 490	1670 x 2270	
MVAD202450	2000			1883x2283		1800 x 555.3	1990 x 490	1870 x 2270	
MVAD222450	2200			2083x2283		2000 x 555.3	2190 x 490	2070 x 2270	

Separation depth plate 30mm

Phone +34 945 601 381
comercial@delvalle.es | www.delvallebox.com

STAINLESS STEEL SOS POST IP66



CUSTOM
TO MEASURE



SOS post 3 modules

The Main Goal of the SOS Postis to Provide a Security Team in an Emergency

The SOS Post consist an emergency station aimed at users and the tunnel's staff, which allows to notify and communicate about any incident happened.
The main goal of the SOS Post is to provide a security team in an emergency, by means of the provision of an emergency telephone and alarm button to allow bidirectional verbal communication between the user and the surveillance staff of the control center. The emergency station should be equipped minimally with an emergency telephone and two fire extinguishers.

FOR MORE INFORMATION CLICK HERE

APPLICATIONS

The SOS Post consist an emergency station aimed at users and the tunnel's staff, which allows to notify and communicate about any incident happened.



STAINLESS STEEL SOS POST IP66

FEATURES

- The SOS Post is an emergency station which include a minimum security equipment:
  - 1 emergency telephone
  - 2 fire extinguishers
- The SOS Post are installed inside the tunnel, in a specific and safety cells, housed the tunnel's wall. Normally, they are separated every 60 m, in alternative way. Also, they should be located in outsides areas, close to the accesses.
- The equipment will be powered to the electrical network 230 V at 60 Hz, with the corresponding protection equipment. In addition, the cabinet will have an auxiliary power supply.

10 YEARS STAINLESS ANTICORROSIVE **GUARANTEE**

CUSTOM TO MEASURE

5 YEARS MECHANICAL PARTS **GUARANTEE**

OPTIONS

- Manufactured in stainless steel AISI 316L EN 14404.
- Option painted galvanized steel finish in RAL 7035 or another color.
- Possibility of realization of two or three modules.

NORMATIVE

- Directive 2004/54/EC safety requirements for tunnels in the Trans-European Road
- IEC EN 62208 and EN 60529. IP66 (IP55 double door without mounting, IP66 with central welded bar mounting).
- DIN 40050-9 - IP69K extiend IEC 60529.
- Manufactured following EU low voltage ruling 2014/35/UE.
- Normative IEC 62208 and EN 62262. IK10 resistance.
- Certificate UL Nema 4x, 12, 3r, 1. N° File E342220.

TWO MODULES DESIGN

This model consists in an electric cabinet with 2 independent doors.

- 1 SSA cabinet with double BIT closure, designed for the storage of electronic equipment that allows operation of the emergency station. Access to authorized personnel is only allowed (maintenance personnel and montrol menter staff).
- 1 SOS cabinet with double wing close, which allows users to use the security team in an emergency. There is a minimum security equipment. The SOS cabinet has a transparent glass door to permit visibility of the safety equipment.

THREE MODULES DESIGN

This model consists in an electric cabinet with 3 independent doors.

- 1 SSA cabinet with double BIT closure, designed for the storage of electronic equipment that allows operation of the emergency station. Access to authorized personnel is only allowed (maintenance personnel and control center staff). It's a roomy cabinet to storage equipment to guarantee perfect and fast communication with the staff in an emergency.
- 2 independent SOS cabinets, both with a wing lock. The first cabinet allows the service of communication with the personnel of the control center. The second cabinet gives the extinguishing equipment.

Phone +34 945 601 381
comercial@delvalle.es | www.delvallebox.com

STAINLESS STEEL SOS POST IP66

PLAN AND REFERENCES TWO MODULES

CLICK HERE TO DOWNLOAD
THE FILES CAD - PLANS - CERTIFICATES





REFERENCES	DIMENSIONS (mm)		
SOS POST 2 MODULES	HIGH - A -	WIDTH - B -	DEPTH - C -
MVAB907537DSOS	900	750	370
Version: Normative UL	Add "UL" to the reference. Ex: "MVAB907537DSOSUL"		
Version: Stainless AISI 316L	Add "S6" to the reference. Ex: "MVAB907537DSOSS6"		
Version: Galvanized	Replace "MVAB" by "MVGB" Ex. "MVGB907537DSOS"		

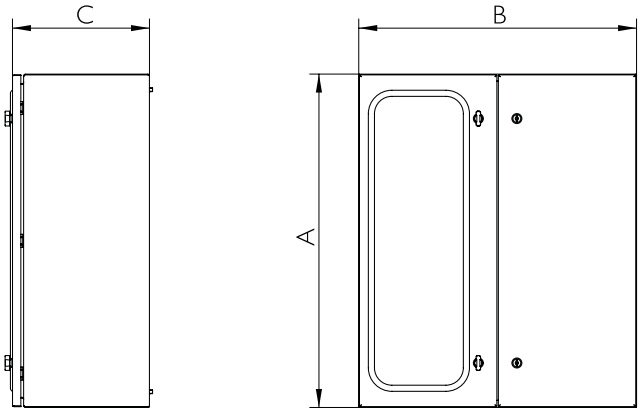

PLAN AND REFERENCES THREE MODULES

REFERENCES	DIMENSIONS (mm)		
SOS POST 3 MODULES	HIGH - A -	WIDTH - B -	DEPTH - C -
MVAB801537.3PSOS	800	1500	370
MVAB901537.3PSOS	900	1500	370
MVAB101537.3PSOS	1000	1500	370
Version: Normative UL	Add "UL" to the reference. Ex: "MVAB907537DSOSUL"		
Version: Stainless AISI 316L	Add "S6" to the reference. Ex: "MVAB907537DSOSS6"		
Version: Galvanized	Replace "MVAB" by "MVGB" Ex. "MVGB907537DSOS"		



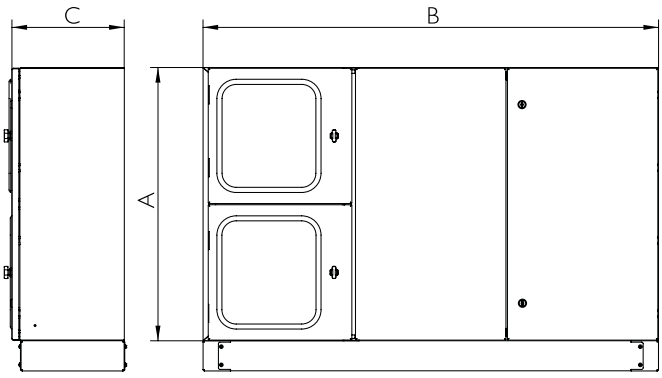



ANTI-POSTER OUTDOOR ENCLOSURE IP66



Examples



Anti-Poster Solution

Outdoor cabinet antiposter, specially designed for public lighting, urban furniture, city hall, shopping centers, buildings...
Its design with rumble strips prevents the sticking of posters. It is also aesthetically more elegant.

APPLICATIONS

- Electrical enclosure outdoor design.
- Urban furniture for city Hall, malls, buildings...

ADVANTAGES

- The cabinet includes security lock, which prevents forced openings, suitable for semi-cylindrical profile closures, electric company, gas keys,...
- Delvalle makes any measure that suits your needs, including holes, channels, shapes, paint,... upon request.
- Anti-graffiti treatment.

OPTIONS

Available in two materials: aluminium and galvanized steel with epoxy-polyester paint.

NORMATIVE

- IP66 Norm EN 62208 and EN 60529.
- Maximum IK10 hit resistance Norm IEC 62262.
- UL Nema 4x, 12, 1, 3r by request. N° File E342220.

Phone +34 945 601 381
comercial@delvalle.es | www.delvallebox.com



GALVANIZED STEEL ELECTRICAL ENCLOSURES

PAINTED GALVANIZED STEEL WALL CABINET

LUXOR SERIES IP66



Example

The Manufacture of the Stainless Steel Monobloc Gives 100% Sealing and Maximum Resistance

The painted galvanized steel enclosures Luxor Series, are characterized by its robust design and surface finish in RAL 7035. Easy opening with chrome closures, smoothly turning, maximum flexibility and opening doors (up to 120°) with stainless steel hinges. Maximum Operating amplitude for the mounting and easily removable.
It has all the necessary measures to ensure their safety in electrical installations in outdoor facilities approvals.

FOR MORE INFORMATION CLICK HERE



PAINTED GALVANIZED STEEL WALL CABINET **LUXOR SERIES** IP66

APPLICATIONS

Specially designed for outdoor environments where weather conditions are bad, such as the maritime sector, or for street lighting applications or services on railway lines, given its advantages of durability and strength.



CHARACTERISTICS

- The manufacture of the stainless steel monobloc gives 100% sealing and maximum resistance.
- With flushing channel that avoids any contact with liquids, polyurethane joints and hidden hinges.
- The standard control panel comes with stainless steel double-bit locking handles.
- Delvalle supplies any measurements required including custom built holes and cut outs both for the door and enclosure.
- Approved for outdoor installations.
- Stainless steel hinges.
- Wide range of accessories.
- Galvanized steel painted RAL 7035.

NORMS

- IEC 60529 norm. IP66 degree.
- UL approval Nema 1, 3r, 4 and 12. Nº File E342220.
- IEC 62262 norm. Maximum IK10 resistance.
- 2014/35/UEDirective. Low voltage ruling.
- IEC 62208 norm.
- Maximum voltage 1000 V.

OPTIONS

- Custom made based on your needs.
- Possibility of two doors.
- 170° hinge that allows maximum opening for easy access to the cabinet without removing the door.
- Socles.
- Metal legs.
- Wall support (not included in the standard model).
- Transparent polycarbonate door.
- Transparent safety glass door.
- Mounting plate insulation (bakelite) or stainless steel.
- EMC version according to 2014/30/UE of electromagnetic compatibility.
- Switchboard graffiti-proof paint.

PAINTED GALVANIZED STEEL WALL CABINET LUXOR SERIES IP66

PLAN

CLICK HERE TO DOWNLOAD
THE FILES CAD - PLANS - CERTIFICATES

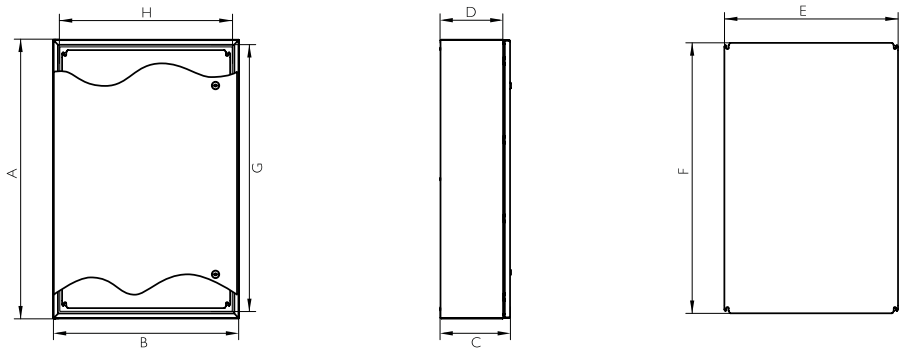

5 YEARS
MECHANICAL PARTS
GUARANTEE

REFERENCES 1 DOOR

REFERENCES			DIMENSIONS (mm)									
BLIND DOOR	POLYCARBONATE DOOR	POLYCARBONATE DOOR + INSIDE DOOR	HEIGHT -A-	WIDTH -B-	DEPTH -C-	ACCESS -GxH-	INSIDE DEPTH -D-	MACHINABLE AREA		PLAQUE MEASUREM. -FxE-	WEIGHT (Kg)	VOL. (m3)
								DOOR	LATERAL			
MVGB302015	MVGB302015T	MVGB302015TC	300	200	155	260 x 153	125	220 x 76	270 x 125	265 x 145	4,65	0,01
MVGB383015	MVGB383015T	MVGB383015TC	380	300	155	340 x 253	125	300 x 176	350 x 125	345 x 245	7,68	0,02
MVGB383021	MVGB383021T	MVGB383021TC	380	300	210	340 x 253	180	300 x 176	350 x 180	345 x 245	8,57	0,03
MVGB404021	MVGB404021T	MVGB404021TC	400	400	210	360 x 353	180	320 x 276	370 x 180	365 x 345	11,12	0,04
MVGB504021	MVGB504021T	MVGB504021TC	500	400	210	460 x 353	180	420 x 276	470 x 180	465 x 345	13,51	0,05
MVGB505021	MVGB505021T	MVGB505021TC	500	500	210	460 x 453	180	420 x 376	470 x 180	465 x 445	16,2	0,06
MVGB604021	MVGB604021T	MVGB604021TC	700	500	210	660 x 453	180	620 x 376	670 x 180	665 x 445	21,55	0,08
MVGB605021	MVGB605021T	MVGB605021TC	600	400	210	560 x 353	180	520 x 276	570 x 180	565 x 345	15,74	0,06
MVGB606021	MVGB606021T	MVGB606021TC	600	500	210	560 x 453	180	520 x 376	570 x 180	565 x 445	18,88	0,07
MVGB606030	MVGB606030T	MVGB606030TC	600	600	210	560 x 553	180	520 x 476	570 x 180	565 x 545	22	0,08
MVGB705021	MVGB705021T	MVGB705021TC	800	600	300	760 x 553	270	720 x 476	770 x 270	765 x 545	31,35	0,16
MVGB806030	MVGB806030T	MVGB806030TC	800	800	300	760 x 753	270	720 x 676	770 x 270	765 x 745	41,5	0,21
MVGB808030	MVGB808030T	MVGB808030TC	1000	800	300	960 x 753	270	920 x 676	970 x 270	965 x 745	50,69	0,26
MVGB108030	MVGB108030T	MVGB108030TC	1200	800	300	1160 x 753	270	1120 x 676	1170 x 270	1165 x 745	59,47	0,31
MVGB101030	MVGB101030T	MVGB101030TC	1000	1000	300	960 x 953	270	920 x 876	970 x 270	965 x 945	61,17	0,32
*MVGC128030	MVGC128030T	MVGC128030TC	1200	1000	300	1090 x 890	275	1000 x 800	1190 x 265	1070 x 870	78.82	0,46
*MVGC121030	MVGC121030T	MVGC121030TC	1000	1200	300	890 x 1090	275	800 x 1000	990 x 265	870 x 1070	78,76	0,39
*MVGC121230	MVGC121230T	MVGC121230TC	1200	1200	300	1000 x 1000	275	1000 x 1000	1190x265	1070 x 1070	92,09	0,39
Version Norme UL Nema 4, 12, 3r and 1			Add "UL" to reference. Ex. "MVAB302015UL"									

*Tribeca Design

Separation plaque fund 20mm

REFERENCES 2 DOORS

REFERENCES	DIMENSIONS (mm)							
2 BLIND DOORS	HEIGHT -A-	WIDTH -B-	DEPTH -C-	ACCESS -GxH-	INSIDE DEPTH -D-	MACHINABLE AREA		PLAQUE MEASUREM. -FxE-
						DOOR	LATERAL	
MVGB806030D	800	600	300	746 x 546	270	720x217.5 and 720x173.5	720x240	740 x 540
MVGB808030D	800	800	300	746 x 746		720x317.5 and 720x273.5	720x240	740 x 740
MVGB108030D	1000	800	300	946 x 746		920x317.5 and 920x273.5	970x240	940 x 740
MVGB128030D	1200	800	300	1146 x 746		1120x317.5 and 1120x273.5	1170x240	1140 x 740
MVGB101030D	1000	1000	300	946 x 946		920x417.5 and 920x373.5	970x240	940 x 940
MVGB121030D	1200	1000	300	1146 x 946		1120x617.5 and 1120x573.5	1170x240	1140 x 940
MVGB121230D	1200	1200	300	1146 x 1146		1120x717.5 and 1120x673.5	1170x240	1140 x 1140
Option: Polycarbonate door	Add "T" to reference. Ex. "MVAB806030DT"							
Option: Polycarbonate door + Inside door	Add "TC" to reference. Ex. "MVAB806030DTC"							
Version Norme UL Nema 4, 12, 3r and 1	Add "UL" to reference. Ex. "MVAB302015UL"							
Option: IP66	Add "66" to reference. Ex. "MVAB806030D66"							

Separation plaque fund 20mm

PAINTED GALVANIZED FREESTANDING ENCLOSURE
TRIBECA SERIES IP66



Example

The Manufacture of the Stainless Steel Monobloc Allows Sealing and Maximum Resistance

The painted galvanized steel enclosures Tribeca Series are rugged, easy opening by rotary and four locking points, smoothly opening by hinges in stainless steel, ease of placement on the floor itself, flexibility and range of maximum operating handle for your assembly, and a unique design painted galvanized steel RAL 7035. Available in one or two 120° revolving doors easily removable. We recommend grommet socket. Chrome closures.

FOR MORE INFORMATION CLICK HERE



PAINTED GALVANIZED FREESTANDING ENCLOSURE **TRIBECA SERIES** IP66

APPLICATIONS

Specially designed for outdoor installations where superior quality and durability needed.
Approved for the food industry, electrical panel, chemical, pharmaceutical, maritime, telecommunications and outdoor general, given the advantages of durability and strength.

5 YEARS
MECHANICAL PARTS **GUARANTEE**

CHARACTERISTICS

- The manufacture of the stainless steel monobloc allows sealing and maximum resistance.
- A drainage channel prevents liquid contact with the polyurethane gasket and with concealed hinges.
- 120º door opening. Standard opening to the left, specify whether you want to the right.
- Delvalle made to order in any size to suit your needs and all drilling holes, both for the door and the enclosure included.
- Distribuited load 600 kg.
- Approved for outdoor installations.
- Stainless steel hinges.
- 100% galvanized steel painted RAL 7035.
- Wide range of models available.

OPTIONS

- Custom made based on your needs.
- With a choice of two doors.
- Switchboard graffiti-proof pain.
- Socles.
- Castors.
- Metal legs.
- Clear polycarbonate door.
- Transparent safety glass door.
- EMC version according to 2014/30/UE of electromagnetic compatibility.

NORMS

- IEC 60529 norm. IP66 (IP55 two doors up to IP66 by request).
- UL approval Nema 1, 3r, 4, 12. Nº File E342220.
- IEC 62262 norm. Maximum IK10 resistance.
- 2014/35/UEdirective. Low voltage ruling directive.
- CE 1935/2004 norm. Materials intended to come into contact with food.
- Maximum voltage 1000 V.
- Temperature resistant: -40°C +100°C (short time +160°C).
- Option silicone gasket: from -60°C to +180°C (short time up to +350°C).

PAINTED GALVANIZED FREESTANDING ENCLOSURE TRIBECA SERIES IP66

PLAN

CLICK HERE TO DOWNLOAD
THE FILES CAD - PLANS - CERTIFICATES

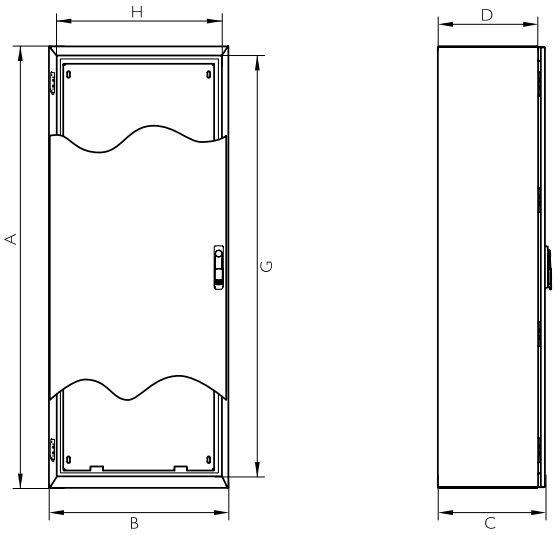

5 YEARS
MECHANICAL PARTS
GUARANTEE

REFERENCES 1 DOOR

REFERENCES							
BLIND DOOR	POLYCARBONATE DOOR	POLYCARBONATE DOOR + INSIDE DOOR	HEIGHT -A-	WIDTH -B-	DEPTH -C-	WEIGHT (Kg)	VOL. (m^3)
MVGC166040	MVGC166040T	MVGC166040TC	1650	600	400	70,9	0,42
MVGC168040	MVGC168040T	MVGC168040TC		800		93,25	0,56
MVGC161040	MVGC161040T	MVGC161040TC		1000		111,3	0,70
MVGC186040	MVGC186040T	MVGC186040TC	1800	600		76,61	0,46
MVGC188040	MVGC188040T	MVGC188040TC		800		100,76	0,61
MVGC186050	MVGC186050T	MVGC186050TC		600	500	84,69	0,57
MVGC188050	MVGC188050T	MVGC188050TC		800		107,21	0,76
MVGC181040	MVGC181040T	MVGC181040TC		1000	400	120,24	0,76
MVGC181050	MVGC181050T	MVGC181050TC			500	127,18	0,95
MVGC206040	MVGC206040T	MVGC206040TC	2000	600	400	84,68	0,51
MVGC208040	MVGC208040T	MVGC208040TC		800		111,19	0,68
MVGC208050	MVGC208050T	MVGC208050TC			500	118,13	0,85
MVGC201040	MVGC201040T	MVGC201040TC		1000	400	132,58	0,85
MVGC201050	MVGC201050T	MVGC201050TC			500	140	1,05

*Ask for minimum order

Separation depth plate 20mm

REFERENCES 2 DOORS

REFERENCES							
BLIND DOOR	POLYCARBONATE DOOR	POLYCARBONATE DOOR + INSIDE DOOR	HEIGHT -A-	WIDTH -B-	DEPTH -C-	WEIGHT (Kg)	VOL. (m^3)
MVGC161240	MVGC161240T	MVGC161240TC	1650	1200	400	129,33	0,84
MVGC181240	MVGC181240T	MVGC181240TC	1800			139,7	0,91
MVGC181250	MVGC181250T	MVGC181250TC			500	147,12	1,14
MVGC201240	MVGC201240T	MVGC201240TC	2000		400	149,61	1,02
MVGC201250	MVGC201250T	MVGC201250TC			500	157,51	1,26
MVGC201440	MVGC201440T	MVGC201440TC		1400	400	169,38	1,18
MVGC201450	MVGC201450T	MVGC201450TC			500	177,76	1,49
MVGC201640	MVGC201640T	MVGC201640TC		1600	400	189,12	1,35
MVGC201650	MVGC201650T	MVGC201650TC			500	197,99	1,68

*Ask for minimum order

Separation depth plate 20mm

MODULAR PAINTED GALVANIZED STEEL ENCLOSURE

TITAN SERIES IP66



Example

Standard With Chrome Fasteners and Stainless Steel Hinges

The painted galvanized steel enclosures Titan Series are modular, fully customizable, flexible environments for food industries, petrochemical, pharmaceutical, power, which need a presence, hygiene, sealing and longer service life.
The doors are hinged and easily removable with a 120° opening, side, rear and top and bottom are removable by screws. Finished in RAL 7035, chrome fasteners and stainless steel hinges.

FOR MORE INFORMATION CLICK HERE



MODULAR PAINTED GALVANIZED STEEL ENCLOSURE TITAN SERIES IP66

APPLICATIONS

Specially designed for outdoor installations. Due to its versatility it can be placed in the food, pharmaceutical, where hygiene is essential, as in petrochemicals, power, where the sealing is critical and industrial environments in general.

CHARACTERISTICS

- Broad assembly area and great accessibility.
- Endless choices, modules and measurements.
- Welded body, which gives it great strength.
- Side rear, top and bottom panels, easily removable.
- Door opens to 120°.
- Standard with chrome fasteners and stainless steel hinges.
- Perfect sealing thanks to gaskets used in the joints.
- Delvalle supplies any measurements required including custom built holes and cut outs both for the door and enclosure.
- Distribuited load 1000 kg.
- Painted galvanized steel RAL 7035.
- Approved for outdoor installations.
- Welded structure.
- Stainless steel hinges.
- Chrome closures.

OPTIONS

- Custom made based on your needs. With the possibility to join several modules.
- Switchboard graffiti-proof pain.
- Socles. Swing rack.
- All types of ventilation.
- Eyebolt (not included in standard model).
- Cable entry cover at base.
- Metal legs and wheels.
- Transparent polycarbonate door, with tempered glass or with safety glass.
- Mounting plate insulator (bakelite) or painted steel.
- EMC version according to 2014/30/UE of electromagnetic compatibility.

NORMS

- IEC 60529 norm, IP66 by request.
- UL approval Nema 1, 3r, 4 and 12. N° File E342220.
- IEC 62262 norm, maximum IK10 resistance.
- 2014/35/UEdirective. Low voltage ruling directive.
- Maximum voltage 1000 V
- Temperature resistant: -40°C +100°C (short time +160°C).
- Option silicone gasket: from -60°C to +180°C (short time up to +350°C).

MODULAR PAINTED GALVANIZED STEEL ENCLOSURE TITAN SERIES IP66

REFERENCES 1 DOOR

REFERENCES		DIMENSIONS (mm)				
BLIND DOOR	TRANSPARENT DOOR	HEIGHT -A-	WIDTH -B-	DEPTH -C-	WEIGHT (Kg)	VOLUME (m^3)
AMCG126040	AMCG126040T	1200	600	400	79,75	0,31
AMCG126060	AMCG126060T			600	91,51	0,46
AMCG126080	AMCG126080T			800	107,1	0,61
AMCG128040	AMCG128040T		800	400	98,23	0,41
AMCG128060	AMCG128060T			600	110,97	0,61
AMCG128080	AMCG128080T			800	127,51	0,81
AMCG146040	AMCG146040T	1400	600	400	87,81	0,36
AMCG146060	AMCG146060T			600	101	0,53
AMCG146080	AMCG146080T			800	118,01	0,71
AMCG148040	AMCG148040T		800	400	112,63	0,48
AMCG148060	AMCG148060T			600	123,12	0,71
AMCG148080	AMCG148080T			800	141,09	0,94
AMCG166040	AMCG166040T	1600	600	400	98,14	0,41
AMCG166060	AMCG166060T			600	111,41	0,61
AMCG166080	AMCG166080T			800	129,82	0,81
AMCG168040	AMCG168040T		800	400	121,01	0,55
AMCG168060	AMCG168060T			600	135,25	0,81
AMCG168080	AMCG168080T			800	154,61	1,07
AMCG161040	AMCG161040T		100	400	139,78	0,68
AMCG161060	AMCG161060T			600	154,98	1,01
AMCG161080	AMCG161080T			800	175,31	1,34
AMCG161240	AMCG161240T		120	400	158,53	0,81
AMCG161260	AMCG161260T			600	174,69	1,21
AMCG161280	AMCG161280T			800	195,98	1,60
AMCG186040	AMCG186040T	1800	600	400	106,65	0,46
AMCG186050	AMCG186050T			500	113,98	0,57
AMCG186060	AMCG186060T			600	121,32	0,69
AMCG186080	AMCG186080T			800	141,16	0,91
AMCG188040	AMCG188040T		800	400	131,75	0,61
AMCG188050	AMCG188050T			500	139,56	0,76
AMCG188060	AMCG188060T			600	147,38	0,91
AMCG188080	AMCG188080T			800	168,19	1,21
AMCG181040	AMCG181040T		1000	400	139,78	0,68
AMCG181050	AMCG181050T			500	160,56	0,95
AMCG181060	AMCG181060T			600	168,86	1,13
AMCG181080	AMCG181080T			800	190,63	1,50
AMCG181240	AMCG181240T		1200	400	172,76	0,91
AMCG181250	AMCG181250T			500	181,53	1,14
AMCG181260	AMCG181260T			600	190,31	1,36
AMCG181280	AMCG181280T			800	213,05	1,80
AMCG206040	AMCG206040T	2000	600	400	116,39	0,51
AMCG206050	AMCG206050T			500	124,2	0,64
AMCG206060	AMCG206060T			600	132,02	0,76
AMCG206080	AMCG206080T			800	153,28	1,01
AMCG208040	AMCG208040T		800	400	143,7	0,68
AMCG208050	AMCG208050T			500	152	0,85
AMCG208060	AMCG208060T			600	160,28	1,01
AMCG208080	AMCG208080T			800	182,51	1,34
AMCG208010	AMCG208010T			100	199,58	1,67
AMCG201040	AMCG201040T		1000	400	165,96	0,85
AMCG201050	AMCG201050T			500	174,73	1,05
AMCG201060	AMCG201060T			600	183,52	1,26
AMCG201080	AMCG201080T			800	206,7	1,67
AMCG226060	AMCG226060T	2200	600	600	141,93	0,84
AMCG226080	AMCG226080T			800	164,63	1,11
AMCG228060	AMCG228060T		800	800	172,38	1,11
AMCG228080	AMCG228080T			800	196,04	1,47
AMCG221060	AMCG221060T		1000	600	197,36	1,38
AMCG221080	AMCG221080T			800	221,97	1,83

Separation depth plate 20mm

MODULAR PAINTED GALVANIZED STEEL ENCLOSURE TITAN SERIES IP66

PLAN

CLICK HERE TO DOWNLOAD
THE FILES CAD - PLANS - CERTIFICATES

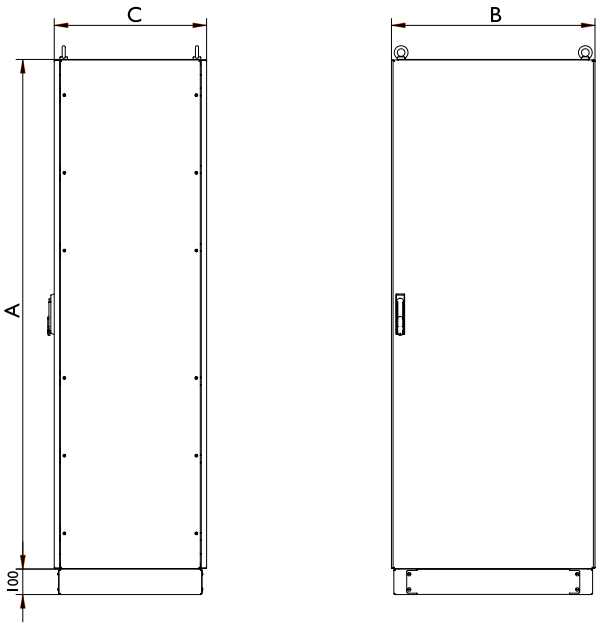

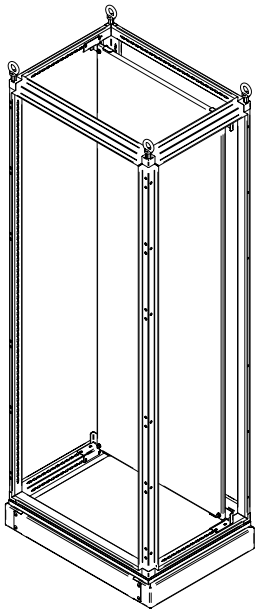

5 YEARS
MECHANICAL PARTS
GUARANTEE

REFERENCES 2 DOORS

REFERENCES		DIMENSIONS (mm)				
BLIND DOOR	TRANSPARENT DOOR	HEIGHT -A-	WIDTH -B-	DEPTH -C-	WEIGHT (Kg)	VOLUME (m^3)
AMCG181050/2	AMCG181050/2T	1800	1000	500	166,76	0,95
AMCG181060/2	AMCG181060/2T			600	175,26	1,13
AMCG201040/2	AMCG201040/2T	2000		400	165,96	0,85
AMCG201050/2	AMCG201050/2T			500	174,73	1,05
AMCG201240/2	AMCG201240/2T		1200	400	195,03	1,02
AMCG201250/2	AMCG201250/2T			500	204,48	1,26
AMCG201260/2	AMCG201260/2T			600	213,94	1,51
AMCG201280/2	AMCG201280/2T			800	238,49	1,99
AMCG221260/2	AMCG221260/2T	2200		600	229,97	1,65
AMCG221280/2	AMCG221280/2T			800	255,95	2,19
AMCG221080/2	AMCG221080/2T		1000	800	229,84	1,83

Separation depth plate 20mm



PAINTED GALVANIZED STEEL JUNCTION BOXES
GEO SERIES IP66



Example

Perfect Sealing Gaskets Used by the Joints

The painted galvanized steel junction boxes Geo are tight, elegant and functional, made of galvanized steel painted RAL 7035.
Available with blind or machine lid, specially designed for the placement of buttons, button. The lid is secured by means of stainless steel screws easy placement, which are embedded without projecting from the front of the box.

FOR MORE INFORMATION CLICK HERE

APPLICATIONS

Specially designed and approved for outdoor installations, transformers, telecommunications and outdoors because of its advantages of durability and resistance to chemical agents.

OPTIONS

- Custom made based on your needs.
- Metal legs. Unloosable screws.
- Switchboard graffiti-proof pain.
- Transparent polycarbonate door or with tempered glass.
- EMC version according to 2014/30/UE of electromagnetic compatibility.

FEATURES

- Unlimited options.
- The manufacture monobloc allows sealing and ensures maximum resistance.
- Perfect sealing gaskets used by the joints.
- Delvalle supplies any measurements required including custom built holes and cut outs both for the door and enclosure.
- Approved for outdoor installations.
- Special customized solutions.
- Galvanized steel painted RAL 7035.
- Unloosable screws in stainless steel.

PAINTED GALVANIZED STEEL JUNCTION BOXES GEO SERIES IP66

NORMATIVE

- IEC 60529 norm. IP66 degree.
- UL approval Nema 1, 3r, 4, 12. Nº File E342220.
- IEC 62262 norm. Maximum IK10 resistance.
- 2014/35/UEdirective. Low voltage ruling directive.
- Maximum voltage 1000 V.
- Temperature resistant: -40°C +100°C (short time +160°C).
- Option silicone gasket: from -60°C to +180°C (short time up to +350°C).

PLAN

CLICK HERE TO DOWNLOAD
THE FILES CAD - PLANS - CERTIFICATES

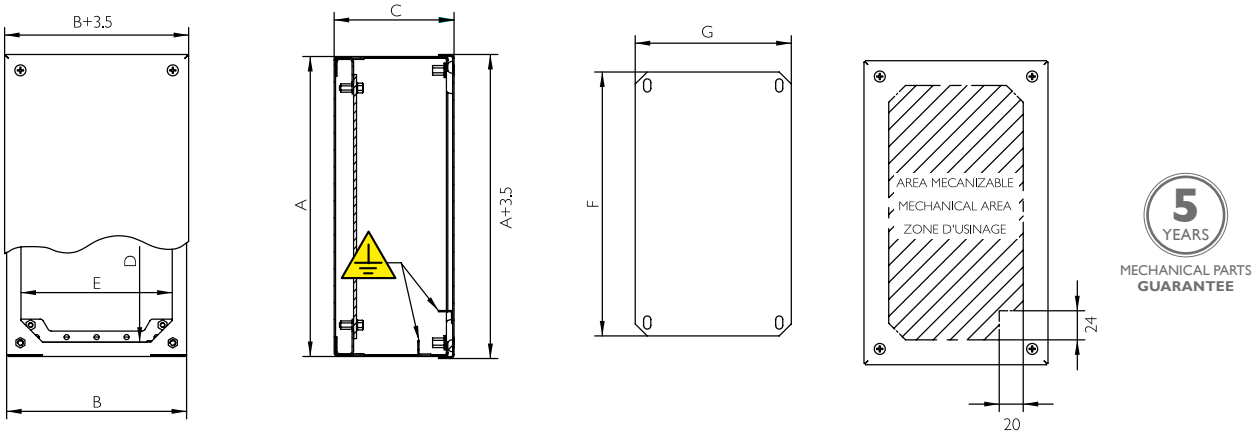

REFERENCES

REFERENCES							
BLIND COVER	PERFORATED COVER	HOLES Nº	HEIGHT -A-	WIDTH -B-	DEPTH -C-	WEIGHT (Kg)	VOLUME (m^3)
MVCBG909080	MVCBG909080P	1	90	90	80	0,68	0,001
MVCBG101612	MVCBG101612P	2	100	160	120	0,92	0,001
MVCBG149080	MVCBG149080P	3	140	90	80	1,2	0,002
MVCBG161612	MVCBG161612P	4	160	160	120	1,75	0,004
MVCBG209080	MVCBG209080P	3	200	90	80	1,29	0,003
MVCBG202012	MVCBG202012P	4	200	200	120	1,81	0,004
MVCBG202515	MVCBG202515P	6	200	250	150	2,53	0,006
MVCBG203015	MVCBG203015P	12	200	300	150	3,25	0,009
MVCBG252515	MVCBG252515P	16	250	250	150	3,87	0,012
MVCBG269012	MVCBG269012P	15	260	90	120	3,75	0,011
MVCBG303015	MVCBG303015P	25	300	300	150	5,16	0,016
MVCBG304015	MVCBG304015P	35	300	400	150	6,64	0,022
MVCBG404015	MVCBG404015P	49	400	400	150	8,41	0,028

*Ask for minimum order

Separation plaque fund 20mm

PAINTED GALVANIZED STEEL OUTDOOR ENCLOSURE

TROPICO SERIES IP66



Example

Stainless Steel Hinges

Tropico Series are manufactured from galvanized steel painted RAL 7035 are developed and designed for outdoor use, with recessed door closing vandal triple action rotary knob. Also get a water-resistant to IP66 (IP23 with ventilation gills) and the highest possible resistance IK10.
Self-ventilated hood and optionally engages socket, not forgetting the high resistance of inlaid doors, so it is designed against vandalism.

FOR MORE INFORMATION CLICK HERE

APPLICATIONS

Our painted galvanized steel outdoor enclosures Tropico Series finish and seal are specially designed for outdoor telecommunications, lighting, auxiliary services on railway lines, as well as to house, with all reliability, protection of electrical equipment and electronic, in the railway sector, urban built and telecommunications (ICT), TV, ISDN, RT, TB, TLCA.

OPTIONS

- Plinths at base for enclosures of any size. They allow enclosures to stand above the floor, with extra room for cable entry. Available as 100mm and 200mm high.
- Fasteners and widthrs for ground fixing.
- Graffiti-proof protective paint.
- EMC version according to 2014/30/UE of electromagnetic compatibility.

PAINTED GALVANIZED STEEL OUTDOOR ENCLOSURE TROPICO SERIES IP66

FEATURES

- Automatic condensation evacuation.
- The enclosure includes anti-vandalism locks and handles, adapted for electric and gas company locking systems.
- Chrome plated locks and hinges in stainless.
- Delvalle makes to order any pre-cut units for your needs, including holes, channels, both in the door and in the enclosure itself.
- 100% painted galvanized steel RAL 7035.
- Stainless steel hinges.
- Approved for outdoor public lighting installations outdoors.
- Wide range of accessories.

NORMATIVE

- EN 62208 and EN 60529 norms. IP66 degree.
- UL approval Nema 1, 3r, 4 and 12. N° File E342220.
- IEC 62262 norm. Maximum IK10 hit resistance.
- IEC 60068-2-30 and IEC 60068-2-11 norms.
- 2014/35/UEdirective.
- EN 60439-5 norm. Resistant to impact sharp objects.
- Maximum voltage 1000 V.
- Temperature resistant: -40°C +100°C (short time +160°C).
- Option silicone gasket: from -60°C to +180°C (short time up to +350°C).

PLAN

CLICK HERE TO DOWNLOAD THE FILES CAD - PLANS - CERTIFICATES

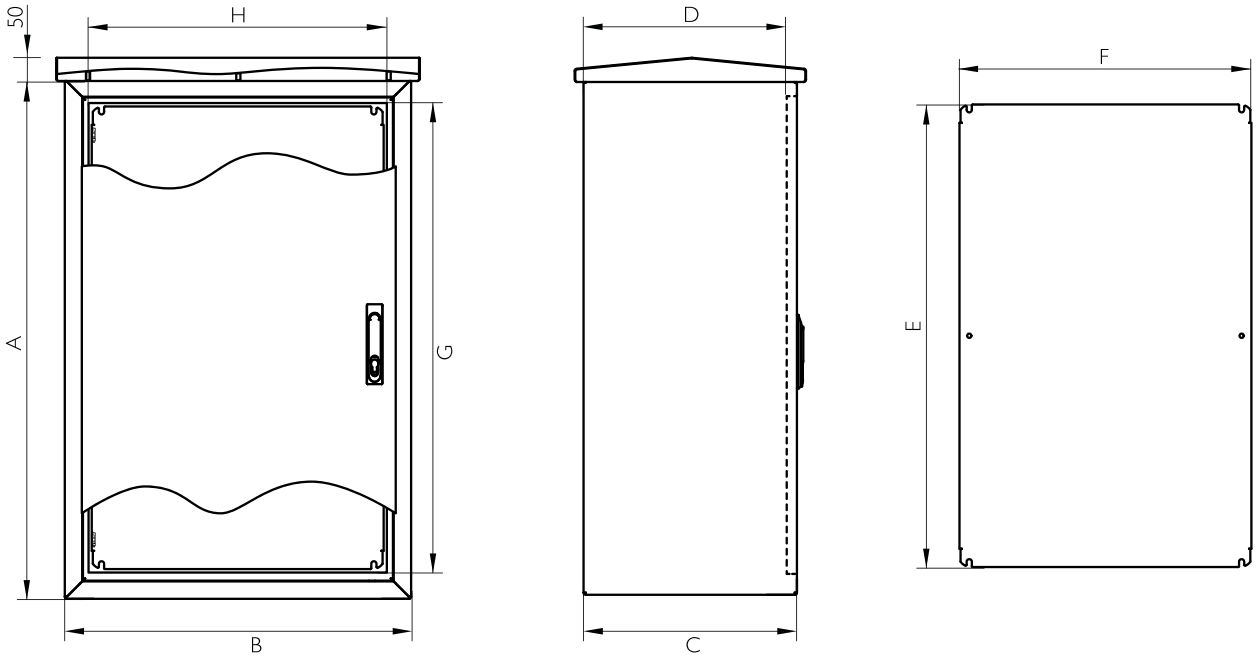

PAINTED GALVANIZED STEEL OUTDOOR ENCLOSURE TROPICO SERIES IP66

REFERENCES

REFERENCES									
REFERENCES	HEIGHT -A-	WIDTH -B-	DEPTH -C-	ACCESS -GxH-	INSIDE DEPTH -D-	MACHINABLE AREA		PLAQUE MEAUREM. -ExF-	DOORS Nº
						DOOR	LATERAL		
MVHD106032	1000	600	320	883x483	297,5	858.5 x 412.8	990 x 310	870 x 475	1
MVHD106040			400		377,5		990 x 390		
MVHD106050			500		477,5		990 x 490		
MVHD126032	1200		320	1083x483	297,5	1058.8 x 412.8	1190 x 310	1070 x 475	
MVHD126040			400		377,5		1190 x 390		
MVHD126050			500		477,5		1190 x 490		
MVHD108032	1000	800	320	883x683	297,5	800 x 530	990 x 310	870 x 675	
MVHD108040			400		377,5		990 x 390		
MVHD108050			500		477,5		990 x 490		
MVHD128032	1200		320	1083x683	297,5	1000x530	1190 x 310	1070 x 675	
MVHD128040			400		377,5		1190 x 390		
MVHD128050			500		477,5		1190 x 490		
MVHD121032		1000	320	1083x683	297,5	1058.5 x 322.3 and 1058.5 x 255.8	1190 x 310	1070 x 870	2
MVHD121040			400		377,5		1190 x 390		
MVHD121050			500		477,5		1190 x 490		
MVHD101232	1000	1200	320	883x1083	297,5	858.5 x 522.3 and 858.5 x 455.8	990 x 310	870 x 1070	
MVHD101240			400		377,5		990 x 390		
MVHD101250			500		477,5		990 x 490		
MVHD801432	800	1400	320	683x1283	297,5	658.5 x 722.3 and 658.5 x 655.8	790 x 310	670 x 1270	
MVHD101432	1000			883x1283		858.5 x 722.3 and 858.5 x 655.8	990 x 310	870 x 1270	
MVHD101440			400		377,5		990 x 390		
MVHD101450			500		477,5		990 x 490		
MVHD121432	1200		320	1083x1283	297,5	1058.5 x 722.3 and 1058.5 x 655.8	1190 x 310	1070 x 1270	
MVHD121440			400		377,5		1190 x 390		
MVHD121450			500		477,5		1190 x 490		
MVHD141432	1400		320	1283x1283	297,5	1258.5 x 722.3 and 1258.5 x 655.8	1390 x 310	1270 x 1270	
MVHD141440			400		377,5		1390 x 390		
MVHD141450			500		477,5		1390 x 490		
MVHD121632	1200	1600	320	1083x1483	297,5	1000 x 570 and 1000 x 570	1190 x 310	1070 x 1470	
MVHD121640			400		377,5		1190 x 390		
MVHD121650			500		477,5		1190 x 490		
MVHD161832	1600	1800	320	1483x1883	297,5	1458.5 x 438.1	1590 x 310	1470 x 1670	3
MVHD161840			400		377,5		1590 x 390		
MVHD161850			500		477,5		1590 x 490		
MVHD162050		2000		1483x1883		1458.5 x 504.8		1470 x 1870	
MVHD182050	1800			1683x1883		1658.5 x 504.8	1790 x 490	1670 x 1870	
MVHD222050	2200			2083x1883		2058.5 x 504.8	2190 x 490	2070 x 1870	
MVHD121657	1200	2200	320	1083x2083	297,5	1058.5 x 571.4	1190 x 310	1070 x 2070	
MVHD121658			400		377,5		1190 x 390		
MVHD121659			500		477,5		1190 x 490		
MVHD121660	1800	2400		1683x2283		1600 x 555.3	1790 x 490	1670 x 2270	
MVHD121661	2000			1883x2283		1800 x 555.3	1990 x 490	1870 x 2270	
MVHD121662	2200			2083x2283		2000 x 555.3	2190 x 490	2070 x 2270	

*Ask for minimum order

Separation depth plate 30mm

Phone +34 945 601 381
comercial@delvalle.es | www.delvallebox.com

PAINTED GALVANIZED STEEL OUTDOOR RACK WITH DOUBLE WALL

TORNADO SERIES IP66



Example

The Best System of Telecommunication Rack Cabinets on the Market

Tornado Series specially designed for outdoor weather system: heat insulated double wall, autoventilated for better protection of electronics, servers, CCTV, telecommunications, voice, data, fiber optic,... Ideal to protect electronic equipment against temperature changes.
Incorporates anti insect mesh to prevent entry of the same to the inside of the closet where the teams stand.
The interior design allows for easy placement of racks, mounting plates, trays, separators,...
Provided with removable gland tray for easy machining holes. Includes socket 100 mm, rack 19 "rack, galvanized steel painted RAL 7035. Vandal black handle made of duralumin with key lock.

FOR MORE INFORMATION CLICK HERE

APPLICATIONS

Ideal for placing computers outside, weather stations, telephony, CCTV, ETSI, fiber optics, security and video surveillance, lighting, telecommunications, signaling and traffic control or any other application that needs extra protection and is housed in outside.

FEATURES

- The best system of telecommunication rack cabinets on the market.
- Earthquake and vibration control.
- Thermo insulated and self-cooled.
- Approved water resistant sealing and UL certified, on exterior doors.
- Anti-vandalism socket.
- Maximum security against vandalism and lever forced opening.
- Painted galvanized steel RAL 7035.
- Provide chrome closures and stainless steel hinges.
- With double wall thermo-isolation.
- Highly resistant to vandalism.

OPTIONS

- Delvalle can design a specific solution to the client's requirements.
- 19" or 21", depending on rack support position.
- Ventilation KIT: fan, dual thermostat and resistance heater.
- Several options in roof ventilation.
- Tratamiento antigraffiti.
- 200 mm plinth at base.
- Possibility of including air conditioning equipment attached to one side or the roof.
- Can also be suppled without a frame rack but with trays.
- Handle with locking system.
- Available with 1 or 2 doors.
- Full range of accessories available.
- The tray can includes micro cuts for later placement of different options.

CIRCULACIÓN DEL AIRE EN EL INTERIOR DEL ARMARIO

- Standard front ventilation cabinet

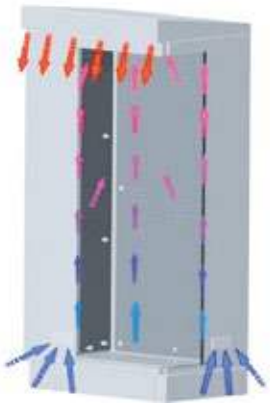

- Cabinet with extra ventilation (front and back)

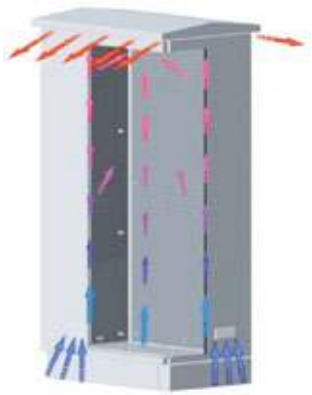

- Cabinet with extra ventilation (four sides)

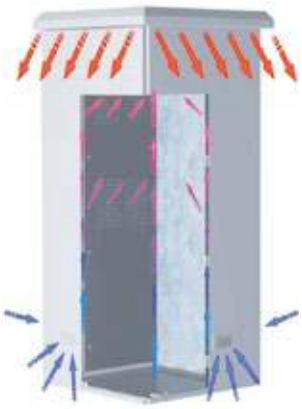

NORMATIVE

- IEC EN 62208 and EN 60529/10.91 norms. IP54 degree (up to IP66).
- UL approval Nema 1, 3r, 4 y 12. N° File E342220.
- Temperature resistant: -40°C +100°C (short time +160°C).
- Maximum voltage 1000 V.
- Option silicone gasket: from -60°C to +180°C (short time up to +350°C).
- EN61969-3 norm. Mechanical Structures for Electronic Equipment and Outdoor Enclosures.

RACK INTEMPERIE DOBLE PARED GALVANIZADO PINTADO SERIE TORNADO IP66

PLAN

CLICK HERE TO DOWNLOAD
THE FILES CAD - PLANS - CERTIFICATES

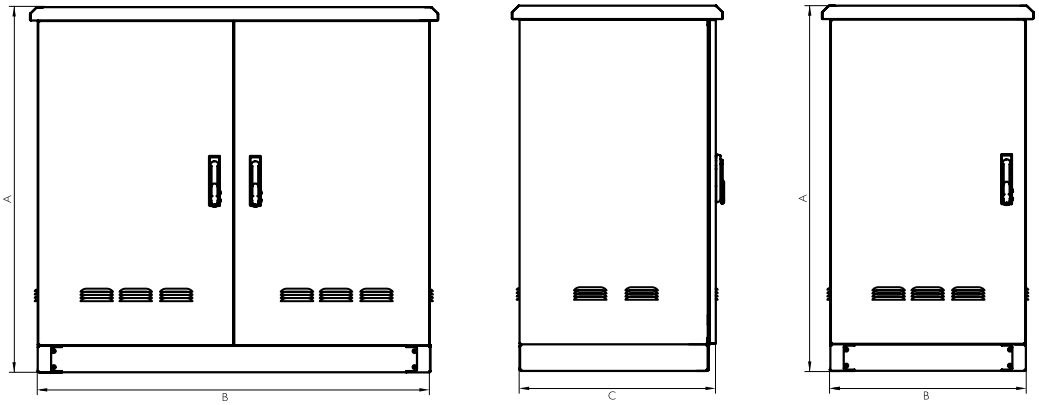

5 YEARS
MECHANICAL PARTS
GUARANTEE

REFERENCES 1 DOOR

REFERENCES		DIMENSIONS (mm)					
GALVANIZED	DESCRIPTION	HEIGHT (A)	WIDTH (B)	DEPTH (C)	MACHINABLE AREA 2 DOORS	MACHINABLE AREA	MEDIDAS PLACA
TRG116080	TORNADO 20 U	1185	600	800	905x430	925x715	965x530
TRG116060	TORNADO 20 U	1185	600	600	905x430	925x515	965x530
TRG118080	TORNADO 20 U	1185	800	800	905x630	925x715	965x730
TRG118060	TORNADO 20 U	1185	800	600	905x630	925x515	965x730
TRG136080	TORNADO 20 U	1385	600	800	1105x430	1125x715	1165x530
TRG136060	TORNADO 25 U	1385	600	600	1105x430	1125x515	1165x530
TRG138080	TORNADO 25 U	1385	800	800	1105x630	1125x715	1165x730
TRG138060	TORNADO 25 U	1385	800	600	1105x630	1125x515	1165x730
TRG156080	TORNADO 30 U	1585	600	800	1305x430	1325x715	1365x530
TRG156060	TORNADO 30 U	1585	600	600	1305x430	1325x515	1365x530
TRG158080	TORNADO 30 U	1585	800	800	1305x630	1325x715	1365x730
TRG158060	TORNADO 30 U	1585	800	600	1305x630	1325x515	1365x730
TRG186080	TORNADO 35 U	1885	600	800	1555x430	1575x715	1615x530
TRG186060	TORNADO 35 U	1885	600	600	1555x430	1575x515	1615x530
TRG188080	TORNADO 35 U	1885	800	800	1555x630	1575x715	1615x730
TRG188060	TORNADO 35 U	1885	800	600	1555x630	1575x515	1615x730
TRG206080	TORNADO 40 U	2060	600	800	1780x430	1800x715	1840x530
TRG206060	TORNADO 40 U	2060	600	600	1780x430	1800x515	1840x530
TRG208080	TORNADO 40 U	2060	800	800	1780x630	1800x715	1840x730
TRG208060	TORNADO 40 U	2060	800	600	1780x630	1800x515	1840x730
TRG208060	TORNADO 40 U	2060	800	600	1780x630	1800x515	1840x730
Version Norms UL		Add "UL" to reference. Ex: "TRG116080UL"					
Version Rear door		Add TR to P to rear door. Ex: "TRG116080P"					

Separation depth plate 20mm

REFERENCES 2 DOORS

REFERENCES		DIMENSIONS (mm)		
GALVANIZED	DESCRIPTION	HEIGHT (A)	WIDTH (B)	DEPTH (C)
TRG111380D	TORNADO 2 DOORS 20 U	1160	1350	800
TRG111360D				600
TRG131380D	TORNADO 2 DOORS 25 U	1385		800
TRG131360D				600
TRG161380D	TORNADO 2 DOORS 30 U	1610		800
TRG161360D				600
TRG181380D	TORNADO 2 DOORS 35 U	1835		800
TRG181360D				600
Version Norms UL	Add "UL" to reference. Ex: "TRG116080UL"			

* All tables refers to standard measures. We work measure. We adapt to client

PAINTED GALVANIZED STEEL OUTDOOR RACK

STORM SERIES IP66



Example

Approval for Outdoor Use

The Storm Series is designed for installation in urban and inter-urban areas, protecting the electronic equipment required for lighting, signage and video surveillance.
The Storm Series are characterized by their high strength and spacious interior, with its manufacturing, getting width and height than the rest useful. They are equipped with waterproof seal on exterior doors approved allowing sealing and internal stability ideal for placement in areas of extreme temperatures and harsh weather environments temperature. It is made of painted galvanized steel RAL 7035 and incorporates a vandal handle made of a highly resistant material against vandalism and forced openings. The interior design allows easy placement of racks, mounting plates or separators.

FOR MORE INFORMATION CLICK HERE



PAINTED GALVANIZED STEEL OUTDOOR RACK **STORM SERIES** IP66

APPLICATIONS

Our cabinets Storm Series are specially designed for outdoor use. As its name suggests, its placement on roads is common for either signaling or lighting, as well as their use in monitoring in urban or interurban meteorological weather stations, telecommunications, telephony, fiber optic video.



MECHANICAL PARTS
GUARANTEE

CHARACTERISTICS

- Very good mechanical properties and high resistance to shape distorsion.
- With water repellent injected seal.
- Door retained with stoppers.
- The enclosure includes anti-vandalism locks and handles suitable for semi-cylindrical profile locks.
- Delvalle can adapt this design to the measurements required by the client, retaining the fundamentals of insulation, sealing and safety.
- Painted galvanized steel RAL 7035.
- Approved for intemeperie facilities.
- Highly resistant to vandalism.
- Stainless steel hinges.
- Spacious interior.

OPTIONS

- Designs and pictures available on request.
- Plinths at base for enclosures of any size. They allow enclosures to stand over the floor, with extra room for cable entry. Available 100mm (standard) and 200mm high.
- Ventilation kit (Fan, resistance heating and dual thermostat).
- Graffiti-proof protective paint.
- EMC version according to 2014/30/UE of electromagnetic compatibility.

NORMS

- EN 62208 and EN 60529 norms. IP66 degree.
- UL approval Nema 1, 3r, 4 y 12. N° File E342220.
- IEC 62262 norm. Maximum IK10 resistance.
- EN 61969-3. Mechanical Structures for Electronic Equipment - outdoor enclosures -.
- IEC 60068-2-30 and IEC 60068-2-11 norms.
- 2014/35/UEdirective.
- EN 60439-5 . Shock resistant against sharp objects.
- Maximum voltage 1000 V.
- Temperature resistant: -40°C +100°C (short time +160°C).
- Option silicone gasket: from -60°C to +180°C (short time up to +350°C).

PAINTED GALVANIZED STEEL OUTDOOR RACK **STORM SERIES** IP66

PLAN

CLICK HERE TO DOWNLOAD
THE FILES CAD - PLANS - CERTIFICATES

FRONT DOOR

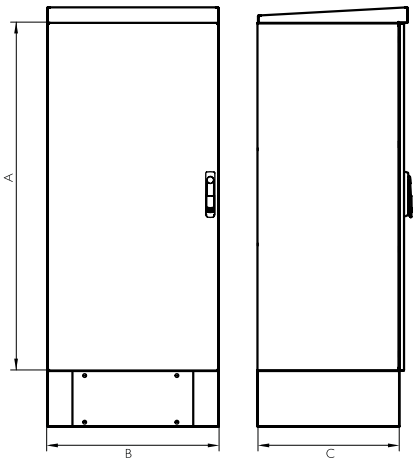

5 YEARS
MECHANICAL PARTS
GUARANTEE

FRONT AND REAR DOOR

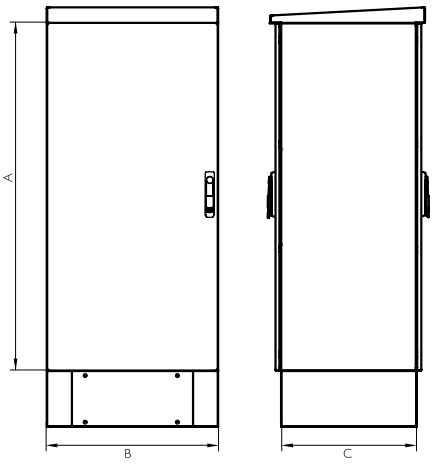

REFERENCES 1 DOOR

REFERENCES	DIMENSIONES			
GALVANIZED	HEIGHT -A-	WIDTH -B-	DEPTH -C-	U´s
RDG606040	600	600	400	12 U
RDG606050			500	
RDG606060			600	
RDG606080			800	
RDG806040	800		400	17 U
RDG806060			600	
RDG106060	1000		600	22 U
RDG126040	1200		400	24 U
RDG126050			500	
RDG126060			600	
RDG126080			800	
RDG146040	1450		400	30 U
RDG146050			500	
RDG146060			600	
RDG146080			800	
RDG148040		800	400	
RDG148050			500	
RDG148060			600	
RDG148080			800	
RDG168080	1600		800	35 U
RDG159080	1500	900	800	33 U
RDG196040	1900	600	400	40 U
RDG196050			500	
RDG196060			600	
RDG196080			800	
RDG198040		800	400	
RDG198050			500	
RDG198060			600	
RDG198080			800	

REFERENCES 2 DOORS (FRONT AND BACK)

REFERENCES	DIMENSIONES			
GALVANIZED	HEIGHT -A-	WIDTH -B-	DEPTH -C-	U´s
RDG606080P	600	600	800	12 U
RDG126080P	1200		800	24 U
RDG146080P	1450	600	800	30 U
RDG148040P	1450	800	400	
RDG148050P	1450		500	
RDG148060P	1450		600	
RDG148080P	1450		800	
RDG196080P	1900	600	800	40 U
RDG198040P	1900	800	400	
RDG198050P	1900		500	
RDG198060P	1900		600	
RDG198080P	1900		800	



ALUMINIUM ELECTRICAL ENCLOSURES

ELECTRICAL ALUMINIUM MOUNTED ENCLOSURES
LUXOR SERIES IP66



Example

The Perfect Solution to Reduce Weight Without Give Up Resistance

Luxor Series electrical monobloc cabinet with one or two doors, made of aluminium and finished in textured paint RAL 7035.
The only cabinet made of aluminium in large sizes.
Monobloc performance allows IP66 sealing and IK7 resistance.

FOR MORE INFORMATION CLICK HERE



ELECTRICAL ALUMINIUM MOUNTED ENCLOSURES **LUXOR SERIES** IP66

APPLICATIONS

- Especially designed for automatic positioning, machine control, meters heating, air conditioning, control systems, electrical distribution, network controls in the industrial sector.
- Electrical control panel approved for wind and solar plants, telecommunications and any outdoor placement because of its advantages of durability and resistance to external agents.

10 YEARS
ANTICORROSIVE **GUARANTEE**

ADVANTAGES

- Large space in the interior
- Three times less weight than standard cabinet.
- The monobloc manufacture gives perfect sealing and maximum resistance.
- Perfect cooling.
- With fl ushing channel that avoids contact with the of liquids polyurethane gasket and hidden hinges.
- The standard control panel comes with double-bit handles.
- Delvalle makes to order any pre cut items to suit your needs, including holes, channels, both in the door and in the enclosure it self.

OPTIONS

- Custom made based on your needs.
- With a choice of two doors (from 800x600).
- Finished in textured on request paint RAL.
- Roof protection from sun, rain,...
- Transparent polycarbonate door.
- Transparent door with safety glass.
- Cable entry cover.
- Mounting plate insulator (bakelite) or stainless steel.
- EMC version according to 2014/30/UE of electromagnetic compatibility.



NORMS

- IP66 (IP55 deux portes sans montage, IP66 avec un poste montage central) Norm IEC EN 62208 EN 60529.
- Maximum IK7 resistance Norm IEC 62208 and EN 50102.
- Our electrical panels are built to CE standards 2014/35/UE.
- UL approval Nema 4, 12, 3r, 1. N° File E342220.

ELECTRICAL ALUMINIUM MOUNTED ENCLOSURES **LUXOR SERIES** IP66

PLAN

CLICK HERE TO DOWNLOAD
THE FILES CAD - PLANS - CERTIFICATES

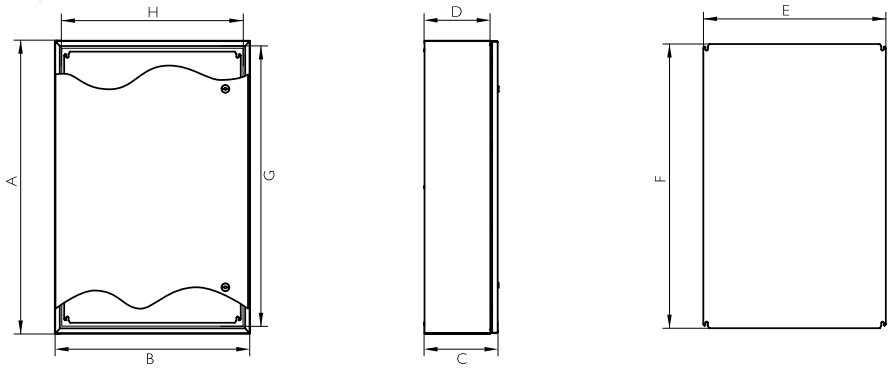

10 YEARS
STAINLESS
ANTICORROSIVE
GUARANTEE

REFERENCES 1 DOOR

REFERENCES	DIMENSIONS (mm)								
BLIND DOOR (x)	HEIGHT -A-	WIDTH -B-	DEPTH -C-	INSIDE HEIGHT	INSIDE WIDTH	INSIDE DEPTH	MACHINABLE AREA		PLATE MEASUREMENT -ExF-
							DOOR	SIDE	
MVALB302015	300	200	155	237	137	135	214,5x78,7	270x150	240x130
MVALB383015	380	300	155	317	237	135	294,5x178,7	350x250	320x230
MVALB383021	380	300	210	317	237	190	294,5x178,7	350x250	320x230
MVALB404021	400	400	210	337	337	190	314,5x278,7	370x350	340x330
MVALB504021	500	400	210	437	337	190	414,5x278,7	470x350	440x330
MVALB505021	500	500	210	437	437	190	414,5x378,7	470x450	440x430
MVALB603821	600	400	210	537	337	190	514,5x278,7	570x350	540x330
MVALB705021	700	500	210	637	437	190	614,5x378,7	670x450	640x430
MVALB605021	600	500	210	537	437	190	514,5x378,7	570x450	540x430
MVALB606021	600	600	210	537	537	190	514,5x478,7	570x550	540x530
MVALB806030	800	600	300	737	537	280	714,5x478,7	770x550	740x530
MVALB808030	800	800	300	737	737	280	653x613	770x750	740x730
MVALB108030	1000	800	300	937	737	280	853x613	970x750	940x730
MVALB128030	1200	800	300	1137	737	280	1053x613	1170x750	1140x730
MVALB101030	1000	1000	300	937	937	280	853x813	970x950	940x930
MVALB121030	1200	1000	300	1137	937	280	1053x813	1170x950	1140x930
*MVALB101230	1000	1200	300	946	1146	275	1053x1013	970x240	870x1070
*MVALB121230	1200	1200	300	1146	1146	275	853x1013	1170x240	1070x1070

Option: Polycarbonate door	Add "T" to the reference Ex. "MVAB806030DT"
Option: Polycarbonate door + Inside door	Add "TC" to the reference Ex."MVAB806030DTC"
Version UL approval Nema 4x, 12, 3r and 1	Add "UL" to the reference Ex. "MVAB302015UL"

*Tribeca design

Separation depth plate 20 mm

REFERENCES 2 DOORS

REFERENCES	DIMENSIONS (mm)							
2 BLINDS DOORS (x)	HEIGHT - A -	WIDTH - B -	DEPTH - C -	ACCESS	INSIDE DEPTH	MACHINABLE AREA		PLATE MEASUREMENT -ExF-
						DOOR	SIDE	
MVALB806030D	800	600	300	746 x 546	270	720x217.5 and 720x173.5	720x240	740 x 540
MVALB808030D	800	800	300	746 x 746		720x317.5 and 720x273.5	720x240	740 x 740
MVALB108030D	1000	800	300	946 x 746		920x317.5 and 920x273.5	970x240	940 x 740
MVALB128030D	1200	800	300	1146 x 746		1120x317.5 and 1120x273.5	1170x240	1140 x 740
MVALB101030D	1000	1000	300	946 x 946		920x417.5 and 920x373.5	970x240	940 x 940
MVALB121030D	1200	1000	300	1146 x 946		1120x617.5 and 1120x573.5	1170x240	1140 x 940
MVALB121230D	1200	1200	300	1146 x 1146		1120x717.5 and 1120x673.5	1170x240	1140 x 1140

Option: Polandcarbonate door	Add "T" to the reference Ex."MVAB806030DT"
Option: Polandcarbonate door + Inside door	Add "TC" to the reference Ex."MVAB806030DTC"
Version UL approval Nema 4x, 12, 3r and 1	Add "UL" to the reference Ex. "MVAB806030DUL"
Option: IP66	Add "66" to the reference Ex. "MVAB806030D66"

Separation depth plate 20 mm

Phone +34 945 601 381
comercial@delvalle.es | www.delvallebox.com

ALUMINIUM PUSH-BUTTON BOXES
GEO SERIES IP66



Examples



Light Weight Solution With 3 Times Lower Than Normal

Waterproof, elegant and functional junction boxes Geo Series, manufactured in aluminium and finished in RAL 7035.
Available in plain or bored cover (Ø 22.5). And especially designed for placing push-buttons.
The cover has embedded screw closure so they don't protrude from the front of the cover.

FOR MORE INFORMATION CLICK HERE



ALUMINIUM PUSH-BUTTON BOXES GEO SERIES IP66

APPLICATIONS

Especially designed for placing push-buttons and cable entry...
Approved for wind and solar plants, telecommunications and transformer industries and any outdoor use because of its high durability and resistance to external agents.

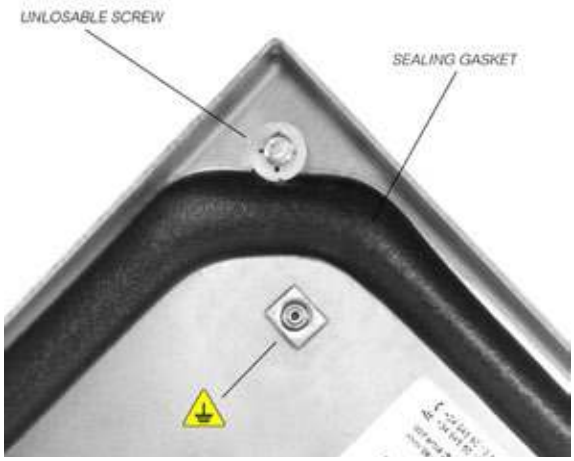

ADVANTAGES

- Order by measure based on your needs.
- Blind or perforated cover.
- Light boxes three times lower weight than standard one.
- Strength, durability and long life.
- Special solutions.
- Monobloc design.
- Delvalle makes to order any pre cut items to suit your needs, including holes, channels, both in the door and in the enclosure it self.

OPTIONS

- Custom made based on your needs.
- Metal legs.
- Fixed screws.
- Transparent polycarbonate or tempered glass door.
- Finished in textured paint different RAL colours on request.
- Mounting plate insulator (bakelite) or stainless steel.
- EMC version according to 2014/30/UE of electromagnetic compatibility.

NORMATIVE

- IP66 Norm IEC EN 62208 and EN 60529.
- Maximum IK7 hit resistance Norm IEC 62208 and EN 50102.
- 2014/35/UElow voltage norms.
- UL approval Nema 4, 12, 3r, 1. Nº File E342220.
- Compliant RoHS Directive 2011/65/UE.
- Maximum voltage 1000 V.
- Temperature resistant: -40°C +100°C (short time +160°C).
- Option silicone gasket: from -60°C to +180°C (short time up to +350°C).

ALUMINIUM PUSH-BUTTON BOXES GEO SERIES IP66



10 YEARS
ANTICORROSIVE
GUARANTEE

PLAN

CLICK HERE TO DOWNLOAD
THE FILES CAD - PLANS - CERTIFICATES

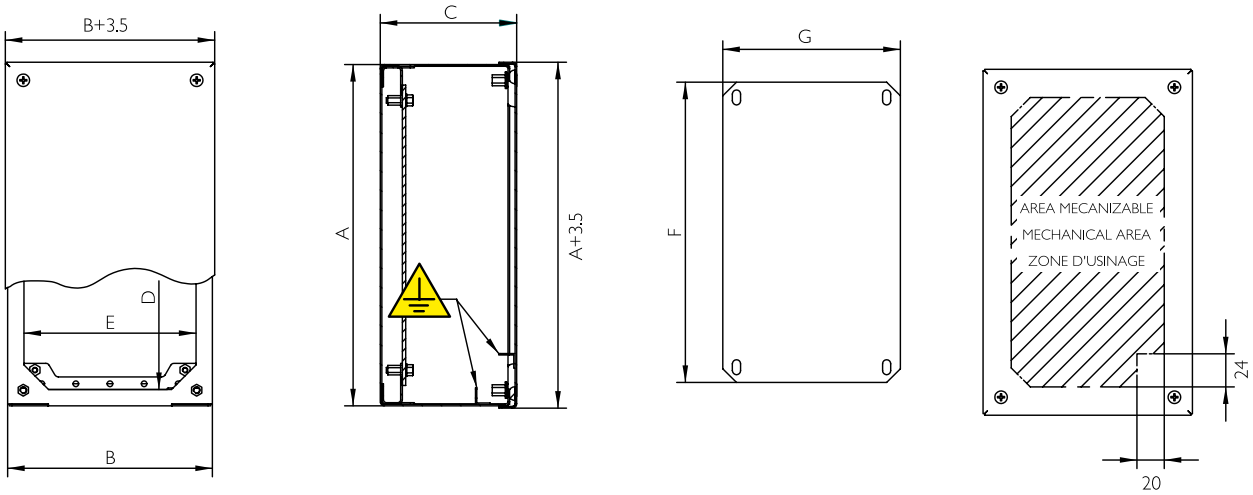

REFERENCES

REFERENCES		COVER	DIMENSIONS (mm)					
BLIND COVER	PERFORATED COVER	N° HOLES	HEIGHT - A -	WIDTH - B -	DEPTH - C -	ACCESS - DxE -	MACHINABLE AREA	PLATE MEASUR. - FxG -
MVCBA909080	MVCBA909080P	1	90	90	80	66x66	48x48	60x70
MVCBA149080	MVCBA149080P	2	140	90	80	116x66	98x48	110x70
MVCBA209080	MVCBA209080P	3	200	90	80	176x66	158x48	170x70
MVCBA269012	MVCBA269012P	4	260	90	120	236x66	218x48	230x70
MVCBA101612	MVCBA101612P	3	100	160	120	76x136	58x118	70x140
MVCBA161612	MVCBA161612P	4	160	160	120	136x136	118x118	130x140
MVCBA202012	MVCBA202012P	6	200	200	120	176x176	158x158	170x180
MVCBA202515	MVCBA202515P	12	200	250	150	176x226	158x208	170x230
MVCBA252515	MVCBA252515P	16	250	250	150	226x226	208x208	220x230
MVCBA203015	MVCBA203015P	15	200	300	150	176x276	158x258	170x280
MVCBA303015	MVCBA303015P	25	300	300	150	276x276	258x258	270x280
MVCBA304015	MVCBA304015P	35	300	400	150	276x376	258x358	270x380
MVCBA404015	MVCBA404015P	49	400	400	150	376x376	358x358	370x380
Version: Normative UL			Add "UL" to the reference. Ex. "MVCB909080UL"					

ALUMINIUM FREE-STANDING ENCLOSURE
TRIBECA SERIES IP66



Example

Light Enclosure With a Weight Three Times Less Than a Normal One

Tribeca Series compact electric cabinet with an improved design, robust, easy to open by rotating handle with four locking points, smoothly opening, easy installation on the oor itself, exibility, maximum working width and made in aluminum painted RAL 7035.
The only enclosure in the market in aluminum and with large sizes.
The monobloc allows sealing to IP65 and IK7 resistance. Available in one or two revolving doors 120° and easily removable. Socket for cable entry cover recommended.

FOR MORE INFORMATION CLICK HERE



ALUMINIUM FREE-STANDING ENCLOSURE TRIBECA SERIES IP66

APPLICATIONS

Specially designed for the placement of automation, machine control, counters, heating, air conditioning, control systems, electrical distribution, industrial networks, the industrial environment...
Electric enclosure approved for wind industry, solar, transformers, telecommunications and outdoors, given its advantages of durability and resistance against external agents.

10 YEARS
ANTICORROSIVE GUARANTEE

OPTIONS

- Custom made based on your needs.
- With a choice of two doors (from 1200mm width).
- Finished in textured on request paint RAL.
- Roof protection from sun, rain,...
- Transparent polycarbonate door.
- Transparent door with safety glass.
- Cable entry cover.
- Mounting plate insulator (bakelite) or stainless steel.
- EMC version according to 2014/30/UE of electromagnetic compatibility.

ADVANTAGES

- Large space in the interior.
- Light enclosure with a weight three times less than a normal one.
- Delivered with protective lm that prevents scratches during handling.
- Monobloc desing that guarantees more tightness and corrosion resistance.
- With drainage canal that prevents liquid contact with polyurethane gasket and concealed hinges.
- 120º door opening. Standard opening to the left, specify if it is prefered rightward.
- The electrical panel comes standard with handle lock with four locking points and concealed hinges made of stainless steel.
- Delvalle made by order any size that suits your needs and all drilling holes, both in the door and the enclosure.

NORMATIVE

- To IP66 (IP55 two doors)
  Norm IEC EN 62208 EN 60529.
- Maximum IK7 resistance
  Norm IEC 62208 and EN 50102.
- Manufactured following EU low voltage ruling 2014/35/UE.
  UL approval Nema 4, 12, 3r, 1.
  Nº File E342220.

ALUMINIUM FREE-STANDING ENCLOSURE TRIBECA SERIES IP66

PLAN

CLICK HERE TO DOWNLOAD
THE FILES CAD - PLANS - CERTIFICATES

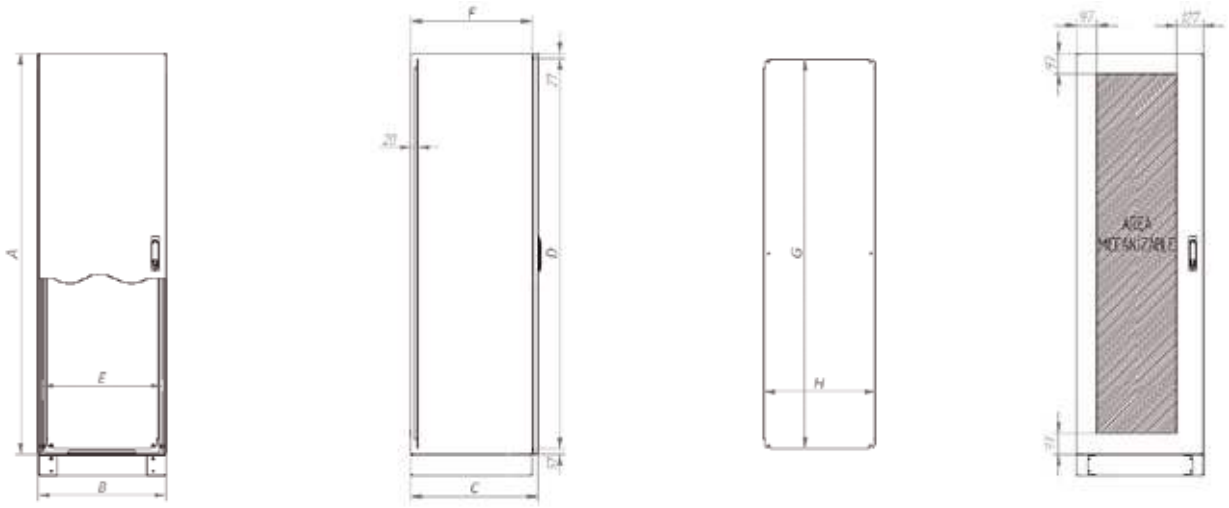

REFERENCES 1 DOOR

REFERENCES		DIMENSIONS (mm)		
BLIND DOOR	POLYCARBONATE DOOR	HEIGHT - A -	WIDTH - B -	DEPTH - C -
MVALC166040	MVALCT166040	1650	600	400
MVALC168040	MVALCT168040		800	
MVALC161040	MVALCT161040		1000	
MVALC186040	MVALCT186040	1800	600	
MVALC188040	MVALCT188040		800	
MVALC188050	MVALCT188050			500
MVALC181040	MVALCT186050		1000	400
MVALC181050	MVALCT188050			500
MVALC206040	MVALCT206040	2000	600	
MVALC208040	MVALCT208040		800	400
MVALC208050	MVALCT208050			500
MVALC201040	MVALCT201040		1000	400
MVALC201050	MVALCT201050			500
Version: Normative UL. Nema 4x, 12, 3r and 1			Add "UL" to the reference. Ex "MVALC166040 UL"	

Separation depth plate 20mm

REFERENCES 2 DOORS

REFERENCES		DIMENSIONS (mm)		
BLIND DOOR	POLYCARBONATE DOOR	HEIGHT - A -	WIDTH - B -	DEPTH - C -
MVALC161240	MVALCT161240	1650	1200	400
MVALC181240	MVALCT181240	1800	1200	
MVALC181250	MVALCT181250			500
MVALC201240	MVALCT201240	2000	1200	400
MVALC201250	MVALCT201250			500
MVALC201440	MVALCT201440		1400	400
MVALC201450	MVALCT201450			500
MVALC201640	MVALCT201640		1600	400
MVALC201650	MVALCT201650			500
Version: Normative UL. Nema 4x, 12, 3r and 1			Add "UL" to the reference. Ex "MVALC166040 UL"	

Separation depth plate 20mm

ALUMINIUM OUTDOOR RACK WITH DOUBLE WALL
TORNADO SERIES IP66



Example

Large Space Inside for Rack Equipments

Cabinet with or without 19" or 21" rack system, especially designed for outdoor use: thermo-insulated and self-cooling double wall for better protection of the electronics, servers, CCTV, telecommunications, voice, data, fibre optics, etc... Ideal for protecting electronic equipment against temperature change.
Fitted anti-insect grille to stop flies entering the cabinets.
The interior design allows easy placement of racks, mounting plates, trays, dividers,...
Equipped with a removable tray for easy cable entry and hole cutting. Includes socket 100 mm, 19 " frame rack, polyester paint finish (RAL 7035) resistant to corrosion and weathering.
Anti-vandalism handle made of black duralumin with a key lock.

FOR MORE INFORMATION CLICK HERE



ALUMINIUM OUTDOOR RACK WITH DOUBLE WALL **TORNADO SERIES** IP66

APPLICATIONS

Ideal for outdoor computer placement, weather stations, telecommunications, CTV, ETSI, fibre optics, security and video surveillance, traffic light controls, street lighting or any other application that needs extra outdoor protection.
For outdoor use in areas experiencing extreme temperatures or harsh environments.

10 YEARS
ANTICORROSIVE **GUARANTEE**

OPTIONS

- Delvalle can design a specific solution to the client's requirements while retaining thefundamentals of thermal insulation, sealing, safety and easy installation.
- 19" or 21", depending on rack support position.
- Ventilation Kit: fan, dual thermostat and resistance heater.
- Several options in roof ventilation.
- 200 mm plinth at base.
- Possibility of including air conditioning equipment attached to one side or the roof.
- Can also be suppled without a frame rack but with trays.
- Handle with lock.ing system.
- Available with 1 or 2 doors.
- Full range of accessories available.
- Degree of protection: up to IP66.
- The tray can includes micro cuts for later placement of different options.

ADVANTAGES

- The best system of telecommunication rack cabinets on the market.
- Earthquake and vibration control.
- Thermo insulated and self-cooled.
- Approved water resistant sealing and UL certified, on exterior doors.
- Maximum security against vandalism and lever forced opening.
- Anti-vandalism socket.
- Maximum insulation capacity.
- Especially designed for telecomunications, telephone, fibre optics and public lighting.
- Double thermal proof walls.
- Highly resistant to vandalism.

TECHNICAL FEATURES

- Material: stainless steel, aluminium or galvanized.
- Rack colour: grey RAL 7035. Other colours on request.
- Height: from 1185 mm to 1585 mm (other sizes on request).
- Width: 600 mm and 800 mm. (other sizes on request).
- Depth: 600 mm and 800 mm (other sizes on request).
- Rack height: 20 U, 25 U and 30 U.
- Sealing: from IP43 to IP66
- Packing unit: 1
- Front door: metal with anti-vandalism handle
- Cable entry: from below

Phone +34 945 601 381
comercial@delvalle.es | www.delvallebox.com

ALUMINIUM OUTDOOR RACK WITH DOUBLE WALL **TORNADO SERIES** IP66

10 YEARS
ANTICORROSIVE
GUARANTEE

NORMS

- From IP43 to IP66 . Norm IEC EN 62208 and EN 60529/10.91.
  - IP43 with ventilation brackets
  - IP54 with vent grille
  - IP66 without ventilation
- 2014/35/UE
- EN 50102
- Maximum voltage 1000 V.
- Certificat UL Nema 4, 12, 1, 3r á la demande. Nº File E342220.
- EN61969-3 Mechanical Structures for Electronic Equipment and Outdoor Enclosures.
- UL Nema 4x, 12, 1, 3r by request. Nº File E342220.

PLAN

CLICK HERE TO DOWNLOAD
THE FILES CAD - PLANS - CERTIFICATES

SIDE VIEW

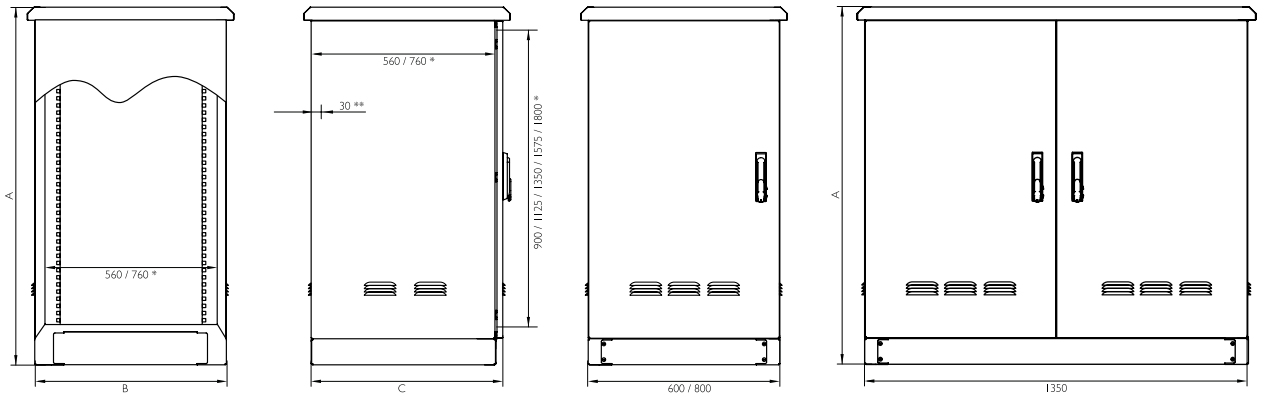

*Internal dimensions

**Internal dimensions for two door cabinets

ALUMINIUM OUTDOOR RACK WITH DOUBLE WALL **TORNADO SERIES** IP66

REFERENCES 1 DOOR

REFERENCES	DIMENSIONS (mm)						
ALUMINIUM	DESCRIPTION	HEIGHT (A)	WIDTH (B)	DEPTH (C)	DOUBLE DOOR MACHINABLE AREA	LATERAL MACHINABLE AREA	PLATE MEASURES
TRAL116080	TORNADO 20 U	1185	600	800	905x430	925x715	965x530
TRAL116060	TORNADO 20 U	1185	600	600	905x430	925x515	965x530
TRAL118080	TORNADO 20 U	1185	800	800	905x630	925x715	965x730
TRAL118060	TORNADO 20 U	1185	800	600	905x630	925x515	965x730
TRAL136080	TORNADO 25 U	1385	600	800	1105x430	1125x715	1165x530
TRAL136060	TORNADO 25 U	1385	600	600	1105x430	1125x515	1165x530
TRAL138080	TORNADO 25 U	1385	800	800	1105x630	1125x715	1165x730
TRAL138060	TORNADO 25 U	1385	800	600	1105x630	1125x515	1165x730
TRAL156080	TORNADO 30 U	1585	600	800	1305x430	1325x715	1165x730
TRAL156060	TORNADO 30 U	1585	600	600	1305x430	1325x515	1165x730
TRAL158080	TORNADO 30 U	1585	800	800	1305x630	1325x715	1365x530
TRAL158060	TORNADO 30 U	1585	800	600	1305x630	1325x515	1365x530
TRAL186080	TORNADO 35 U	1885	600	800	1555x430	1575x715	1615x530
TRAL186060	TORNADO 35 U	1885	600	600	1555x430	1575x515	1615x530
TRAL188080	TORNADO 35 U	1885	800	800	1555x630	1575x715	1615x730
TRAL188060	TORNADO 35 U	1885	800	600	1555x630	1575x515	1615x730
TRAL206080	TORNADO 40 U	2060	600	800	1780x430	1800x715	1840x530
TRAL206060	TORNADO 40 U	2060	600	600	1780x430	1800x515	1840x530
TRAL208080	TORNADO 40 U	2060	800	800	1780x630	1800x715	1840x730
TRAL208060	TORNADO 40 U	2060	800	600	1780x630	1800x515	1840x730
Version Norme UL	Add "UL" to reference. Ex: "TR208080UL"						
Version Rear Door	Add code letter P to reference. Ex: "TR208080P"						

Separation depth plate 20mm

REFERENCES 2 DOORS

REFERENCES	DIMENSIONS (mm)			
ALUMINIUM	DESCRIPTION	HEIGHT (A)	WIDTH (B)	DEPTH (C)
TRAL111380D	TORNADO 20 U	1160	1350	800
TRAL111360D				600
TRAL131380D	TORNADO 25 U	1385		800
TRAL131360D				600
TRAL161380D	TORNADO 30 U	1610		800
TRAL161360D				600
TRAL181380D	TORNADO 35 U	1835		800
TRAL181360D				600
Version Norme UL	Add "UL" to reference. Ex: "TR208080UL"			

* Standard dimensions (any rack can be custom made to meet needs)



HYGIENIC DESIGN ENCLOSURES

JUNCTION BOX FRESH GEO SERIES IP66



Example

Specially Designed for Placing Push-Buttons

Fresh Geo Series push-button and junction boxes, elegant watertight boxes made wholly in finelypolished AISI 304L EN-14306 stainless steel available in plain or bored covers (22.5).
Specially designed for placing push-buttons.

FOR MORE INFORMATION CLICK HERE

ADVANTAGES

- Unlimited options.
- Supplied with protective film which prevents scratches and abrasions during handling.
- The manufacture of the stainless steel monobloc allows sealing and ensures maximum resistance.
- Water channel to prevent liquids coming into contact with the polyurethane seal and hidden hinges giving perfect sealing.
- Delvalle supplies any measurements required including custom built holes and cut outs both for the door and enclosure.
- Temperature resistant: -40°C +100°C (short time +160°C).
- Option silicone gasket: from -60°C to +180°C (short time up to +350°C).
- Up to IP67or IP69K.

APPLICATIONS

Especially designed and officially approved for food, chemical, pharmaceutical, transformer and telecommunication industries for use both inside and outside, due to the advantages of high resistance to chemical agents and durability.

OPTIONS

- Custom made based on your needs.
- IP67 or IP69K according IEC EN 62208 and EN 60529.
- Manufactured in stainless steel AISI 316L EN 14404.
- Metal legs.
- Unloosable screws.
- Finished in textured paint RAL on request.
- Mounting plate insulator (bakelite) or painted steel.
- EMC version according to 2014/30/UE of electromagnetic compatibility.
- We have hygienic glands on request.
- Option painted galvanized steel finish in RAL 7035 or another color.

JUNCTION BOX FRESH GEO SERIES IP66

NORMATIVE

- IP66 Norm IEC 60529 (IP67 on request).
- DIN 40050-9 - IP69.
- DIN EN ISO 14159 Machine safety – hygiene requirements pertaining to the design of machinery.
- Machinery Directive 2006/42/EC. Food machinery and cosmetic or pharmaceutic production.
- EHEDG Guideline Hygienic Design doc.13 machinery for open processes.
- DIN EN 1672-2:2006 for food industry machinery.
- Maximum IK10 resistance Norm IEC 62262.
- Manufactured following EU low voltage ruling 2014/35/UE.
- RoHS Directive 2011/65/UE compliant.
- UL approval Nema 4x, 12, 3r, 1. N° File E342220.
- Maximum voltage 1000 V.
- Temperature resistant: -40°C +100°C (short time +160°C).
- Option silicone gasket: from -60°C to +180°C (short time up to +350°C).

PLAN

CLICK HERE TO DOWNLOAD THE FILES CAD - PLANS - CERTIFICATES

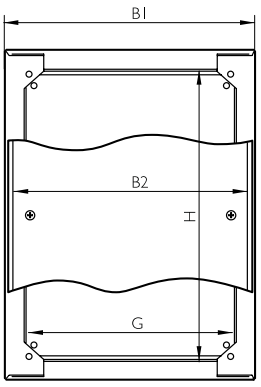

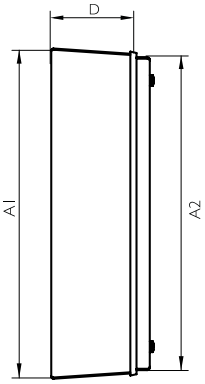

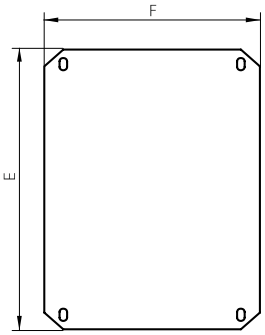

5 YEARS
MECHANICAL PARTS **GUARANTEE**

10 YEARS
STAINLESS ANTICORROSIVE **GUARANTEE**

REFERENCES

REFERENCES		COVER	DIMENSIONS (mm)							
BLIND DOOR	PERFORATED COVER	N° HOLES	HEIGHT - A1 -	WIDTH - B1 -	DEPTH - C -	ACCES - DxE -	MECHANIZABLE AREA	PLATE MEASUREMENT - FxE -	WEIGHT (Kg)	VOLUME (m^3)
MVCBJ909080	MVCBJ909080P	1	90	90	80	66x66	48x48	60x70	0,68	0,001
MVCBJ149080	MVCBJ149080P	2	140	90	80	116x66	98x48	110x70	0,92	0,001
MVCBJ209080	MVCBJ209080P	3	200	90	80	176x66	158x48	170x70	1,2	0,002
MVCBJ269012	MVCBJ269012P	4	260	90	120	236x66	218x48	230x70	1,75	0,004
MVCBJ289080	MVCBJ289080P	5	280	90	80	256x66	238x48	250x70	1,6	0,003
MVCBJ101612	MVCBJ101612P	3	100	160	120	76x136	58x118	70x140	1,29	0,003
MVCBJ161612	MVCBJ161612P	4	160	160	120	136x136	118x118	130x140	1,81	0,004
MVCBJ202012	MVCBJ202012P	6	200	200	120	176x176	158x158	170x180	2,53	0,006
MVCBJ202515	MVCBJ202515P	12	200	250	150	176x226	158x208	170x230	3,25	0,009
MVCBJ252515	MVCBJ252515P	16	250	250	150	226x226	208x208	220x230	3,87	0,011
MVCBJ203015	MVCBJ203015P	15	200	300	150	176x276	158x258	170x280	3,75	0,011
MVCBJ303015	MVCBJ303015P	25	300	300	150	276x276	258x258	270x280	5,16	0,016
MVCBJ304015	MVCBJ304015P	35	300	400	150	276x376	258x358	270x380	6,64	0,022
MVCBJ404015	MVCBJ404015P	49	400	400	150	376x376	358x358	370x380	8,41	0,028
Version: Norm UL			Add "UL" to reference. Ex: "MVCBJ909080UL"							
Version IP69K			Add "/69" to reference. Ex: "MVCBJ909080/69"							

ELECTRICAL ENCLOSURE FRESH TRIBECA SERIES IP66



Example

Special Enclosure for Food Industry

Electrical FRESH Tribeca Series enclosure with a large capacity, specially designed for the food industry.
No openings, hinges, where bacteria could lie. Easy opening by rotating handle and four point lock, easy placement on the floor, flexible, maximum working width.
Moreover the inclination of the roof prevents objects being placed on the surface and our vertical electro polished finish helps repel liquids and prevent virus and bacteria building up on the surface.

FOR MORE INFORMATION CLICK HERE



ELECTRICAL ENCLOSURE FRESH TRIBECA SERIES IP66

APPLICATIONS

Especially designed for the food industry and sterile rooms, wineries, dairies and take away food outlets or any other place where cleanliness is essential as well as total absence of dust, dirt and bacteria.

NORMATIVE

- IP66 (IP55 two doors) by request. Norm IEC 60529.
- DIN 40050-9 - IP69.
- Maximum IK10 resistance Norm IEC 62262.
- EC 1935/2004 rule compliant for materials intended to come into contact with food.
- DIN EN ISO 14159 Machine safety – hygiene requirements pertaining to the design of machinery.
- Machinery Directive 2006/42/EC (previously 89/37/EC) Food machinery and cosmetic or pharmaceutic production.
- EHEDG Guideline Hygienic Design doc.13 machinery for open processes.
- DIN EN 1672-2:2006 for food industry machinery.
- Manufactured following EU low voltage ruling 2014/35/UE.
- Compliant RoHS Directive.
- UL approval Nema 4x, 12, 3r, 1. Nº File E342220.
- Maximum voltage 1000 V.
- Temperature resistant: -40°C +100°C (short time +160°C).
- Option silicone gasket: from -60°C to +180°C (short time up to +350°C).

OPTIONS

- Custom made based on your needs.
- IP69K according EN 60529.
- Option painted galvanized steel finish in RAL 7035 or another color.
- With a choice of two doors (from 1200 mm width).
- Plinths at base.
- Castors.
- Metal legs.
- Transparent polycarbonate door or transparent safety glass door (no IP69K).
- Manufactured in stainless steel AISI 316L. EN 14404.
- Mounting plate insulator (bakelite) or stainless steel.
- We have hygienic glands on request.

ADVANTAGES

- Supplied wrapped in protective film which prevents scratches and abrasions during handling.
- The monobloc manufacture gives total sealing and maximum resistance.
- No openings where bacteria could lie.
- With electro-polished finish that helps to slide the liquid and waterproof seal that prevents dirt and bacteria deposits.
- 100% stainless steel, from handle to opening system.
- 120º door opening. Standard opening to the left. Specify if you need opening to the right.
- Standard electrical panel and handle lock with four locking points and concealed stainless steel hinges.
- Delvalle supplies any measurements required including custom built holes and cut outs both for the door and enclosure.
- Distribuited load 600 Kg.

ELECTRICAL ENCLOSURE FRESH TRIBECA SERIES IP66

PLAN

CLICK HERE TO DOWNLOAD
THE FILES CAD - PLANS - CERTIFICATES

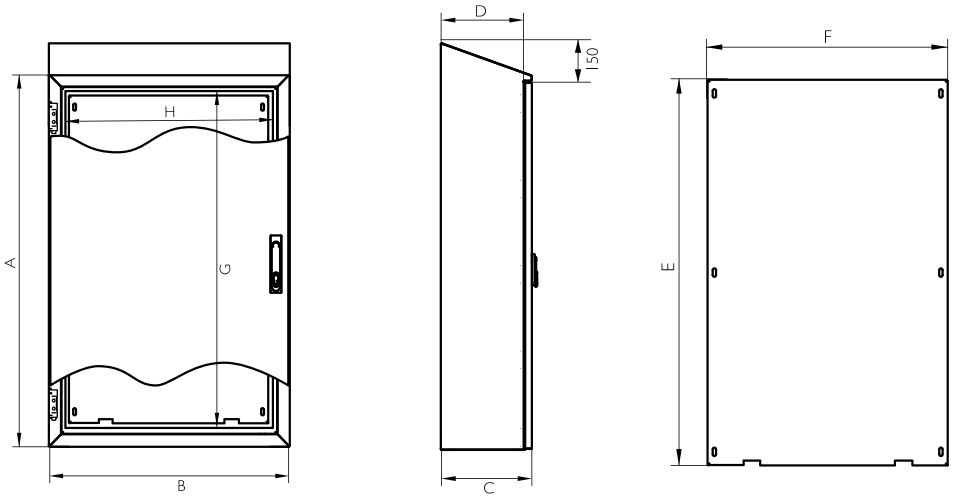

5 YEARS
MECHANICAL PARTS
GUARANTEE

10 YEARS
STAINLESS
ANTICORROSIVE
GUARANTEE

REFERENCES 1 DOOR

REFERENCES	DIMENSIONS (mm)								
BLIND DOOR	HEIGHT - A -	WIDTH - B -	DEPTH - C -	INSIDE HEIGHT - G -	INSIDE WIDTH - H -	INSIDE DEPTH - D -	PLATE MEASUREMENT -ExF-	WEIGHT (Kg)	VOLUME (m^3)
MVACJJ166040	1650	600	400	1390	490	375	1520x470	70,9	0,42
MVACJ168040		800			690		1520x670	93,25	0,56
MVACJ161040		1000			890		1520x870	111,3	0,70
MVACJ186040	1800	600		1540	490		1670x470	76,61	0,46
MVACJ186050			500			475		84,69	0,57
MVACJ188040		800	400		690	375	1670x670	100,76	0,61
MVACJ188050			500			475		107,21	0,76
MVACJ181040		1000	400		890	375	1670x870	120,24	0,76
MVACJ181050			500			475		127,18	0,95
MVACJ206040	2000	600	400	1740	490	375	1870x470	84,68	0,51
MVACJ208040		800			690		1870x670	111,19	0,68
MVACJ208050			500			475		118,13	0,85
MVACJ201040		1000	400		890	375	1870x870	132,58	0,85
MVACJ201050			500			475		140	1,05
Version: Norm UL				Add "UL" to reference. Ex: "MVACJ166040UL"					
Version IP69K				Add "/69" to reference. Ex: "MVACJ166040/69"					



Separation depth plate 20mm

REFERENCES 2 DOORS

REFERENCES	DIMENSIONS (mm)								
BLIND DOOR	HEIGHT - A -	WIDTH - B -	DEPTH - C -	INSIDE HEIGHT - G -	INSIDE WIDTH - H -	INSIDE DEPTH - D -	PLATE MEASUREMENT -ExF-	WEIGHT (Kg)	VOLUME (m^3)
MVACJ161240	1650	1200		1390	1090	375	1520x1070	129,33	0,84
MVACJ181240	1800	1200	400	1540	1090		1670x1070	139,7	0,91
MVACJ181250			500			475		147,12	1,14
MVACJ201240	2000	1200	400	1740	1090	375	1870x1070	149,61	1,01
MVACJ201250			500			475		157,51	1,26
MVACJ201440		1400	400		1290	375	1870x1270	169,38	1,18
MVACJ201450			500			475		177,76	1,47
MVACJ201640		1600	400		1490	375	1870x1470	189,12	1,35
MVACJ201650			500			475		197,99	1,68
Version: Norm UL				Add "UL" to reference. Ex: "MVACJ166040UL"					
Version IP69K				Add "/69" to reference. Ex: "MVACJ166040/69"					



Separation depth plate 20mm

Phone +34 945 601 381
comercial@delvalle.es | www.delvallebox.com

ELECTRICAL ENCLOSURE FRESH LUXOR SERIES IP66



Example

Monobloc Manufacture Gives Total Sealing and Maximum Resistance

Electrical Hygienic Enclosure Fresh Series, specially designed for the food industry.
No openings, hinges, where bacteria could lie but robust and easy lock opening with a big space inside to allow easy working.
Moreover the inclination of the roof prevents objects being placed on the surface and our vertical electro polished finish helps repel liquids and prevent virus and bacteria building up on the surface.

FOR MORE INFORMATION CLICK HERE

APPLICATIONS

Especially designed for the food industry and sterile rooms, wineries, dairies and take away food outlets or any other place where cleanliness is essential as well as total absence of dust, dirt and bacteria.

OPTIONS

- Custom made based on your needs.
- IP69K according EN 60529.
- Option painted galvanized steel finish in RAL 7035 or another color.
- Also made with two doors (from 800x600).
- Plinths at base. Metal legs.
- Transparent polycarbonate door (no IP69K).
- Manufactured in stainless steel AISI 316L.
- Mounting plate insulator (bakelite) or sst.

ADVANTAGES

- Supplied wrapped in protective film which prevents scratches and abrasions during handling.
- The monobloc manufacture gives total sealing and maximum resistance.
- No openings where bacteria could lie.
- 120° door opening. Standard opening to the left. Specify if you need opening to the right.
- With electro-polished finish that helps dispel liquids and waterproof seal that prevents dirt and bacteria deposits.
- Delvalle supplies any measurements required including custom built holes and cut outs both for the door and enclosure.

ELECTRICAL ENCLOSURE FRESH LUXOR SERIES IP66

NORMATIVE

- IP66 Norm IEC 60529.
- DIN 40050-9 - IP69.
- Maximum IK10 resistance Norm IEC 62262.
- EC 1935/2004 rule compliant for materials intended to come into contact with food.
- DIN EN ISO 14159 Machine safety – Hygienic requirements pertaining to the design of machinery.
- DIN EN 1672-2:2006 for food industry machinery.
- Follows EU low voltage ruling 2014/35/UE.
- RoHS Directive 2011/65/UE compliant.
- Machinery Directive 2006/42/EC (previously 89/37/EC) Food machinery and cosmetic or pharmaceutic production.
- EHEDG Guideline Hygienic Design doc.13 machinery for open processes.
- UL approval Nema 4x, 12, 3r, 1. N° File E342220.
- Maximum voltage 1000 V.
- Temperature resistant: -40°C +100°C (short time +160°C).
- Option silicone gasket: from -60°C to +180°C (short time up to +350°C).

PLAN

CLICK HERE TO DOWNLOAD
THE FILES CAD - PLANS - CERTIFICATES

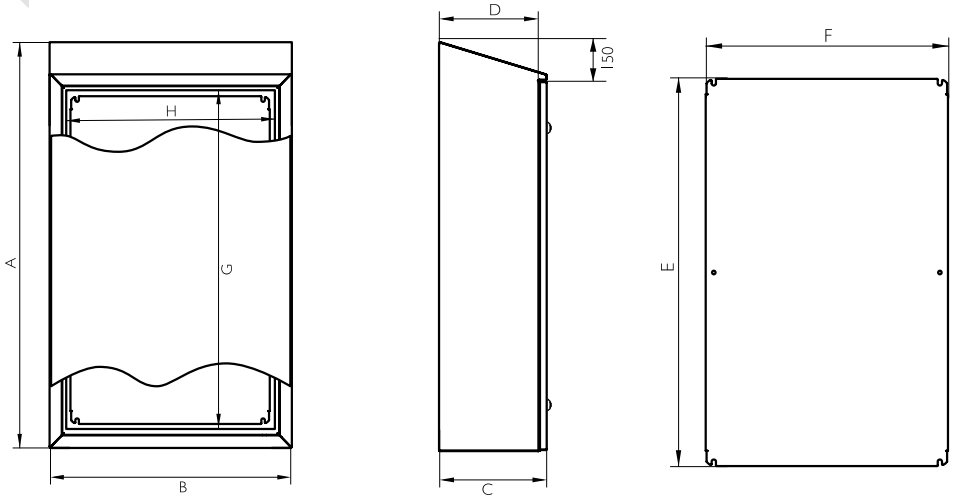

5 YEARS
MECHANICAL PARTS **GUARANTEE**

10 YEARS
STAINLESS ANTICORROSIVE **GUARANTEE**

REFERENCES

REFERENCES	DIMENSIONS (mm)									
BLIND DOOR	HEIGHT -A-	WIDTH -B-	DEPTH -C-	ACCESS -GxH-	DEPTH INSIDE -D-	MECHANIZABLE AREA		PLATE MEASUREMENT -ExF-	WEIGHT (Kg)	VOLUME (m^3)
						DOOR	SIDE			
MVAJ503015	500	300	155	296x246	125	280,2x195,2	459,2x95	290x240	8,95	0,03
MVAJ723815	720	380		516x326		500,2x275,2	679,2x95	510x 320	15,25	0,05
MVAJ753821	750		210	546x326	180	530,2x275,2	709,2x150	540x320	17,23	0,07
MVAJ554021	550	400		346x346		330,2x295,2	509,2x150	340x340	13,51	0,05
MVAJ655021	650	500		446x446		430,2x395,2	609,2x150	440x440	18,91	0,08
MVAJ855021	850			646x446		630,2x395,2	809,2x150	640x440	24,23	0,10
MVAJ756021	750	600		546x546		530,2x495,2	709,2x150	540x540	25,13	0,11
MVAJ106030	1000		300	796x546	270	780,2x495,2	959,2x240	790x540	36,31	0,20
MVAJ108030		800		796x746		728x635	959,2x240	790x740	47,89	0,26
MVAJ128030	1200			996x746		928x635	1159,2x240	990x740	57,13	0,31
MVAJ148030	1400			1196x746		1128x635	1359,2x240	1190x740	65,92	0,36
MVAJ121030	1200	1000		996x946		928x835	1159,2x240	990x940	68,94	0,39
Version: Norm UL. Nema 4x, 12, 3r y 1				Add "UL" to reference. Ex: "MVAB302015UL"						
Version IP69K				Add "/69" to reference. Ex: "MVAB302015/69"						

ELECTRICAL ENCLOSURE HYGIENIC LUXOR SERIES IP66

WITH SILICONE GASKET

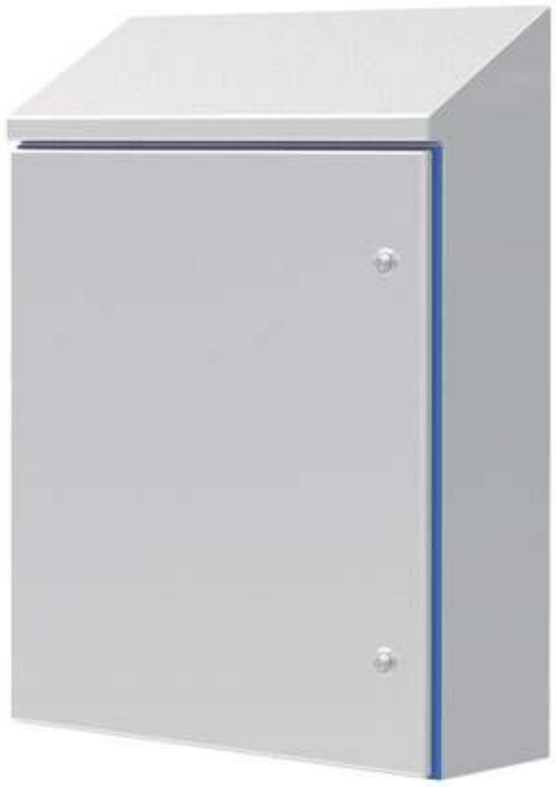

Example

Monobloc Manufacture Gives Total Sealing and Maximum Resistance

Hygienic Design Luxor Electrical enclosure wall made of stainless steel AISI 304L or AISI 316L. Specially designed for the food industry.
No openings, hinges, where bacteria could lie but robust and easy lock opening with a big space inside to allow easy working. Moreover the inclination of the roof prevents objects being placed on the surface and our vertical electro polished finish helps repel liquids and prevent virus and bacteria building up on the surface.

FOR MORE INFORMATION CLICK HERE



ELECTRICAL ENCLOSURE HYGIENIC LUXOR SERIES IP66

APPLICATIONS

Especially designed for the food industry and sterile rooms, wineries, dairies and take away food outlets or any other place where cleanliness is essential as well as total absence of dust, dirt and bacteria.

5 YEARS
MECHANICAL PARTS **GUARANTEE**

10 YEARS
STAINLESS ANTICORROSIVE **GUARANTEE**

OPTIONS

- Custom made based on your needs.
- IP69K according EN 60529.
- Option painted galvanized steel finish in RAL 7035 or another color.
- Also made with two doors (from 800x600).
- Plinths at base and metal legs.
- Transparent polycarbonate door (no IP69K).
- Manufactured in stainless steel AISI 316L.
- Mounting plate insulator (bakelite) or sst.
- We have hygienic glands on request.

ADVANTAGES

- Supplied wrapped in protective film which prevents scratches and abrasions during handling.
- Resistant seal to temperatures from -60°C up to +200°C.
- The monobloc manufacture gives total sealing and maximum resistance.
- No openings where bacteria could lie.
- 90° door opening. Standard opening to the left. Specify if you need opening to the right.
- With electro-polished finish that helps dispel liquids and waterproof seal that prevents dirt and bacteria deposits.
- Delvalle supplies any measurements required including custom built holes and cut outs both for the door and enclosure.
- Temperature resistant: -40°C +100°C (short time +160°C).
- Option silicone gasket: from -60°C to +180°C (short time up to +350°C).
- Captives screws.
- Up to IP69K.

NORMATIVE

- IP66 Norm IEC 60529.
- DIN 40050-9 - IP69.
- Maximum IK10 resistance Norm IEC 62262.
- EC 1935/2004 rule compliant for materials intended to come into contact with food.
- DIN EN ISO 14159 Machine safety – Hygiene requirements pertaining to the design of machinery.
- Machinery Directive 2006/42/EC (previously 89/37/EC) Food machinery and cosmetic or pharmaceutic production.
- EHEDG Guideline Hygienic Design doc.13 machinery for open processes.
- DIN EN 1672-2-2006 for food industry machinery.
- Follows EU low voltage ruling 2014/35/UE.
- RoHS Directive 2011/65/UE compliant.
- UL approval Nema 4x, 12, 3r, 1. N° File E342220.
- Maximum voltage 1000 V.
- Temperature resistant: -40°C +100°C (short time +160°C).
- Option silicone gasket: from -60°C to +180°C (short time up to +350°C).

ELECTRICAL ENCLOSURE HYGIENIC LUXOR SERIES IP66

PLAN

CLICK HERE TO DOWNLOAD
THE FILES CAD - PLANS - CERTIFICATES

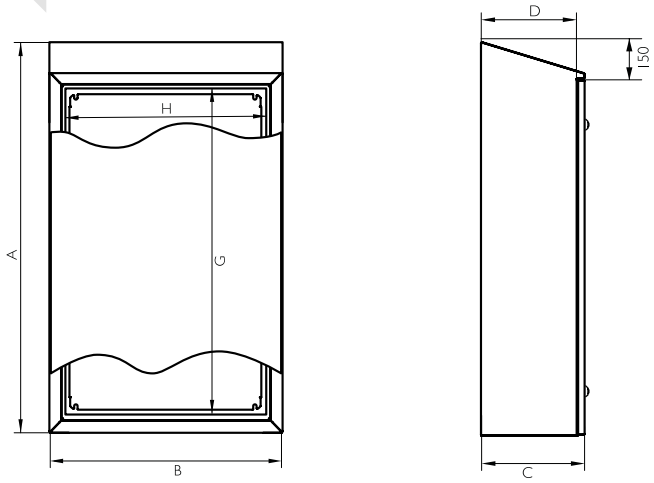

5 YEARS
MECHANICAL PARTS **GUARANTEE**

10 YEARS
STAINLESS ANTICORROSIVE **GUARANTEE**

REFERENCES

REFERENCES	DIMENSIONS (mm)									
BLIND DOOR	HEIGHT -A-	WIDTH -B-	DEPTH -C-	ENTRY ACCESS -GxH-	DEEP USEFUL -D-	MECHANIZABLE AREA		PLATE MEASUREMENT -ExF-	WEIGHT (Kg)	VOLUME (m^3)
						DOOR	SIDE			
HDL373015	370	300	155	272x247	133,5	155,2x191	329,4x101	265x240	7,24	0,02
HDL452215	450	220	155	347x167	133,5	230,2x111	404,.4x101	340x160	6,86	0,02
HDL544021	540	400	210	442x347	188,5	325,2x291	499,4x156	435x340	13,93	0,05
HDL546021	540	600	210	442x547	188,5	325,2x491	499,4x156	435x540	19,39	0,08
HDL553921	550	390	210	447x337	188,5	330,2x281	504,4x156	440x330	13,88	0,05
HDL606121	600	610	210	497x557	188,5	380,2x501	554,4x156	490x550	24,26	0,12
HDL655121	650	510	210	547x457	188,5	430,2x401	604,4x156	540x450	20,07	0,08
HDL665021	660	500	210	562x447	188,5	445,2x391	619,4x156	555x440	20,02	0,08
HDL753921	750	390	210	647x337	188,5	530,2x281	704,4x156	640x330	18,47	0,07
HDL756121	750	610	210	647x557	188,5	530,2x501	704,4x156	640x550	26,5	0,11
HDL764521	760	450	210	662x397	188,5	545,2x341	719,4x156	655x540	20,92	0,08
HDL766021	760	600	210	662x547	188,5	545,2x491	719,4x156	655x540	26,45	0,11
HDL766030	760	600	300	662x547	278,5	545,2x491	719,4x246	655x540	29,06	0,15
HDL128130	1250	810	300	1147x757	278,5	1030,2x701	1204,4x246	1140x750	59	0,33
HDL128140	1250	810	400	1147x757	378,5	1030,2x701	1204,4x346	1140x750	63,75	0,43
HDL148130	1450	810	300	1347x757	278,5	1230,2x701	1404,4x246	1340x750	67,87	0,38
HDL148140	1450	810	400	1347x757	378,5	1230,2x701	1404,4x346	1340x750	73,1	0,50
Version IP69K				Add "/69" to reference. Ex."HDL373015/69"						

Delvalle custom made any size you can not find in this table. Available bottom to 1000 mm

MOUNTING OPTIONS



Wall support

WALL SUPPORT	
REFERENCES	MATERIAL
HD1000SOP	INOX 303
HD1000SOP/6	INOX 316

TRESTLE			
REFERENCES	HEIGHT	WIDTH	DEPTH
HDL208130BAS	200	810	300
HDL208140BAS	200	810	400
HDL308130BAS	300	810	300
HDL308140BAS	300	810	400



Trestle

JUNCTION BOX HYGIENIC GEO SERIES IP66

WITH SILICONE GASKET



Example

The sides have an inclination of 3°

Strength, Durability and Long Life

Hygienic Geo Series push-button and junction boxes, elegant watertight boxes made wholly in finely polished AISI 304L EN-14306 stainless steel available in plain or bored covers (22.5).
Specially designed for placing push-buttons.

FOR MORE INFORMATION CLICK HERE

ADVANTAGES

- Supplied with protective film which prevents scratches and abrasions during handling.
- The manufacture of the stainless steel monobloc allows sealing and ensures maximum resistance.
- Water channel to prevent liquids coming into contact with the polyurethane seal and hidden hinges giving perfect sealing.
- Resistant seal to temperatures from -60°C up to +200°C.
- Captives srews.
- Finished in textured paint RAL on request.
- Up to IP69K.

APPLICATIONS

Especially designed and officially approved for food, chemical, pharmaceutical, transformer and telecommunication industries for use both inside and outside, due to the advantages of high resistance to chemical agents and durability.

OPTIONS

- Custom made based on your needs.
- IP69K according IEC EN 60529.
- Manufactured in stainless steel AISI 316L. EN 14404.
- Metal legs, unloosable screws.
- Transparent polycarbonate door or with tempered glass.
- Mounting plate insulator (bakelite) or painted steel.
- EMC version according to 2014/30/UE of electromagnetic compatibility
- We have hygienic glands on request.
- Option painted galvanized steel finish in RAL 7035 or another color.

JUNCTION BOX HYGIENIC GEO SERIES IP66

NORMATIVE

- IP66 Norm IEC 60529 (IP67 on request).
- DIN 40050-9 - IP69.
- DIN EN ISO 14159 Machine safety – hygiene requirements pertaining to the design of machinery.
- Machinery Directive 2006/42/EC. Food machinery and cosmetic or pharmaceutic production.
- EHEDG Guideline Hygienic Design doc.13 machinery for open processes.
- Maximum IK10 resistance Norm IEC 62262.
- DIN EN 1672-2-2006 for food industry machinery.
- Manufactured following EU low voltage ruling 2014/35/UE
- RoHS Directive 2011/65/UE compliant.
- UL approval Nema 4x, 12, 3r, 1. N° File E342220.
- Maximum voltage 1000 V
- Temperature resistant: -40°C +100°C (short time +160°C).
- Option silicone gasket: from -60°C to +180°C (short time up to +350°C).

PLAN

CLICK HERE TO DOWNLOAD
THE FILES CAD - PLANS - CERTIFICATES

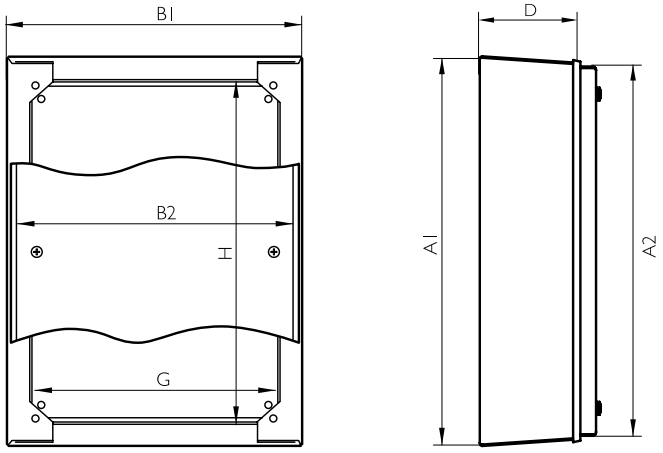

5 YEARS
MECHANICAL PARTS **GUARANTEE**

10 YEARS
STAINLESS ANTICORROSIVE **GUARANTEE**

REFERENCES

REFERENCES	DIMENSIONS (mm)											
BLIND DOOR	HEIGHT		WIDTH		DEPTH -C-	ENTRY ACCESS -GxH-	DEEP USEFUL -D-	AREA MECHANIZABLE COVER	AREA SIDE MECHANIZABLE	PLATE -ExF-	WEIGHTS (Kg)	VOL. (m^3)
	CORPS -A1-	COVER -A2-	CORPS -B1-	COVER -B2-								
HDG151580	156	150	156	150	80	110x110	59,8	80x80	124,6x26,1	100x120	1,72	0,003
HDG151512	160	150	160	150	120	110x110	99,8	80x80	128,8x66,2	100x120	2,06	0,004
HDG202012	210	200	210	200	120	160x160	99,8	130x130	178,8x66,2	150x170	3,09	0,007
HDG302012	310	300	210	200	120	260x160	99,8	230x130	278,8x66,2	250x170	4,17	0,010
HDG402012	410	400	310	200	120	360x160	99,8	330x130	378,8x66,2	350x170	6,3	0,019
HDG403012	410	400	310	300	120	360x260	99,8	330x230	378,8x66,2	350x270	7,25	0,019
Version normative Ul. Nema 4x, 12, 3r y 1					Add "UL" to reference. Ex:"HDG151580UL"							
Version IP69K					Add "/69" to reference. Ex."HDG151580/69"							

Delvalle custom made any size you can not find in this table. Available bottom to 1000 mm



WALL SUPPORT	
REFERENCES	MATERIAL
HD1000SOP	INOX 303
HD1000SOP/6	INOX 316

Phone +34 945 601 381
comercial@delvalle.es | www.delvallebox.com

ELECTRICAL ENCLOSURE HYGIENIC TRIBECA SERIES IP66

WITH SILICONE GASKET



Examples



Monobloc Manufacture Gives Total Sealing and Maximum Resistance

Electrical Hygienic Design Tribeca Series enclosure with a large capacity, specially designed for the food industry.
No openings, hinges, where bacteria could lie. Easy opening by rotating handle and four point lock, easy placement on the floor, flexible, maximum working width.
Moreover the inclination of the roof prevents objects being placed on the surface and our vertical electro polished finish helps repel liquids and prevent virus and bacteria building up on the surface.

FOR MORE INFORMATION CLICK HERE

APPLICATIONS

Especially designed for the food industry and sterile rooms, wineries, dairies and take away food outlets or any other place where cleanliness is essential as well as total absence of dust, dirt and bacteria.

ELECTRICAL ENCLOSURE HYGIENIC TRIBECA SERIES IP66

ADVANTAGES

- Supplied wrapped in protective film which prevents scratches and abrasions during handling.
- Resistant seal to temperatures from -60°C up to +200°C.
- The monobloc manufacture gives total sealing and maximum resistance.
- No openings where bacteria could lie.
- With electro-polished finish that helps to slide the liquid and waterproof seal that prevents dirt and bacteria deposits.
- 100% stainless steel from handle to opening system. 120° door opening. Standard opening to the left.
- Specify if you need opening to the right.
- Standard electrical panel and handle lock with four locking points and concealed stainless steel hinges.
- Delvalle supplies any measurements required including custom built holes and cut outs both for the door and enclosure.
- Distribuited load 600 Kg.
- Captives screws.

OPTIONS

- IP69K protection.
- Option painted galvanized steel finish in RAL 7035 or another color.
- Custom made based on your needs.
- With a choice of two doors (from 1200 mm width).
- Plinths at base. Castors. Metal legs.
- Clear polycarbonate door or tansparent safety glass door (no IP69K).
- Manufactured in stainless steel AISI 316L. EN 14404.
- Mounting plate insulator (bakelite) or stainless steel.
- We have hygienic glands on request.



NORMATIVE

- IP66 (IP55 two doors) by request. Norm IEC 60529.
- DIN 40050-9 - IP69.
- Maximum IK10 resistance Norm IEC 62262.
- EC 1935/2004 rule compliant for materials intended to come into contact with food.
- DIN EN ISO 14159 Machine safety – Hygienic requirements pertaining to the design of machinery.
- Machinery Directive 2006/42/EC (previously 89/37/EC) Food machinery and cosmetic or pharmaceutic production.
- EHEDG Guideline Hygienic Design doc.13 machinery for open processes.
- DIN EN 1672-2-2006 for food industry machinery.
- Manufactured following EU low voltage ruling 2014/35/UE.
- Compliant RoHS Directive.
- UL approval Nema 4x, 12, 3r, 1. N° File E342220.
- Maximum voltage 1000 V.
- Temperature resistant: -40°C +100°C (short time +160°C).
- Option silicone gasket: from -60°C to +180°C (short time up to +350°C).

ELECTRICAL ENCLOSURE HYGIENIC TRIBECA SERIES IP66

PLAN

CLICK HERE TO DOWNLOAD
THE FILES CAD - PLANS - CERTIFICATES

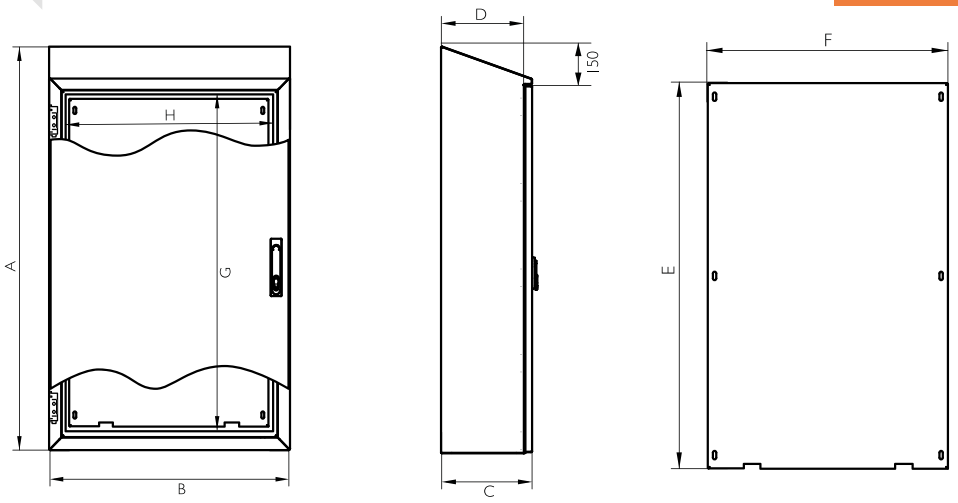

5 YEARS
MECHANICAL PARTS **GUARANTEE**

10 YEARS
STAINLESS ANTICORROSIVE **GUARANTEE**

REFERENCES

REFERENCES	DIMENSIONS (mm)									
BLIND DOOR	HEIGHT -A-	WIDTH -B-	DEPTH -C-	ENTRY ACCESS -GxH-	DEPTH USEFUL -D-	AREA MECHANIZABLE DOOR	AREA SIDE MECHANIZABLE	ACCESS PLATE MEASUREMENT -ExF-	WEIGHT (Kg)	VOLUME (m^3)
HDT166040	1650	600	400	1447x500	375,5	1424x487,8	1614,8x344	1520x490	70,9	0,42
HDT168040	1650	800	400	1447x700	375,5	1424x687,8	1614,8x344	1520x690	93,25	0,56
HDT161040	1650	1000	400	1447x900	375,5	1424x887,8	1614,8x344	1520x890	111,3	0,70
HDT186040	1800	600	400	1597x500	375,5	1574x487,8	1764,8x344	1670x490	76,61	0,46
HDT186050	1800	600	500	1597x500	475,5	1574x487,8	1766x444	1670x490	84,69	0,57
HDT188040	1800	800	400	1597x700	375,5	1574x687,8	1764,8x344	1670x690	100,76	0,61
HDT188050	1800	800	500	1597x700	475,5	1574x687,8	1766x444	1670x690	107,21	0,76
HDT181040	1800	1000	400	1597x900	375,5	1574x887,8	1764,8x344	1670x890	120,24	0,76
HDT181050	1800	1000	500	1597x900	475,5	1574x887,8	1766x444	1670x890	127,18	0,95
HDT206040	2000	600	400	1797x500	375,5	1774x487,8	1964,8x344	1870x490	84,68	0,51
HDT206050	2000	600	500	1797x500	475,5	1774x487,8	1964,8x444	1870x490	93,46	0,64
HDT208040	2000	800	400	1797x700	375,5	1774x687,8	1964,8x344	1870x690	118,13	0,85
HDT208050	2000	800	500	1797x700	475,5	1774x687,8	1966x444	1870x690	118,13	0,85
HDT201040	2000	1000	400	1797x900	375,5	1774x887,8	1964,8x344	1870x890	132,58	0,85
HDT201050	2000	1000	500	1797x900	475,5	1774x887,8	1966x444	1870x890	140	1,05
Version IP69K				Add "/69" to reference. Ex."HDT166040/69"						

Delvalle custom made any size you can not find in this table. Available bottom to 1000 mm

MOUNTING OPTIONS



Metal legs

TRESTLE
REFERENCE
HD2000PAT

METAL LEGS			
REFERENCES	HEIGHT	WIDTH	DEPTH
HDT206040BAS	200	600	400
HDT208040BAS	200	800	400
HDT201040BAS	200	1000	400
HDT206050BAS	200	600	500
HDT208050BAS	200	800	500
HDT201050BAS	200	1000	500
HDT306040BAS	300	600	400
HDT308040BAS	300	800	400
HDT301040BAS	300	1000	400
HDT306050BAS	300	600	500
HDT308050BAS	300	800	500
HDT301050BAS	300	1000	500



Trestle



MODULAR DISTRIBUTION ENCLOSURES

MODULAR DISTRIBUTION WALL CABINETS

TITAN SERIES IP66



Examples



Perfect Sealing and Impact Resistance

Enclosure made with modular profile, able to withstand electrical and mechanical high voltages, a unique design made in A304L stainless steel (polished) with a capacity up to 624 modules in a single enclosure.
Our system consists in a stainless steel perforated pro le, welded to provide great robus tness and the best quality in the market. Doors are hinged and easily removable with an opening of 120°, the sides, rear, top and bottom are also removable with screws.
Easily adaptable, it offers a great advantage: versatility, along with a host of accessories as, for instance, the mounting plates for DXP elements.
They use an innovative fastening system: they slide on a guide and are secured by a locking tab at the proper depth for the correct positioning of the machine and its accessories.
The rows are standard tops 150mm.
Transparent polycarbonate door combines high impact resistance (250 times stronger than glass) with excellent re resistance (UL94). With UV protection and suitable for outdoor applications.
Titan Series is also available in mild steel (painted).

FOR MORE INFORMATION CLICK HERE

Phone +34 945 601 381
comercial@delvalle.es | www.delvallebox.com

MODULAR DISTRIBUTION WALL CABINETS TITAN SERIES IP66

APPLICATIONS

Specially designed for all types of low-voltage switchboards, secondary or tertiary terminals and industrial environments.
Also for residential, tertiary and industrial environments up to 1000A.
For environments where a esthetics is required and also durability and superior cleaning for painted enclosures or outdoor installations.

NORMATIVE

- Properties blind door:
  - IP66 (IP55 for 2 doors) according to IEC EN 62208 and EN 60529.
  - Degree resistance IK10 according to IEC 62208 and EN 50102.
  - UL Nema 4x, 12, 3r, 1. File N° E342220.
- Properties transparent polycarbonate door:
  - IP55 according to IEC EN 62208 and EN 60529.
  - Degree IK7 resistance according to IEC 62208 and EN 50102.
  - Light transmission of 89% and protection from UV rays.
  - Resistance to fire: UL94.
  - Fire classification: BS476 part 7, class IA (5 and 6 mm)
- A system which allows making distributions according to EN 60439-1 standard.
- Manufactured following EU low voltage ruling 2014/35/UE.
- Materials intended to come into contact with food EC 1935/2004 and RoHs compliant.
- Maximum voltage 1000 V.
- Temperature resistant: -40°C +100°C (short time +160°C).
- Option silicone gasket: from -60°C to +180°C (short time up to +350°C).

ADVANTAGES

- Wide view of the modules, mounting space and great accessibility.
- Modular design: enclosures can be assembled together.
- Supports up to 1000 A and allow sealing to IP66 (on request and with full doors).
- Two options: blind door or transparent polycarbonate door.
- Wide range of dimensions of width and depth to allow total exibility in the structures link.
- Welded structure which gives great resistance and strength.
- 100 % steel, from the handle to the open system.
- Standard enclosures include a closing system with handle and three or four locking points.
- Gaskets guarantee complete sealing.
- Delvalle makes any size according to your needs.

OPTIONS

- Made to measure based on your needs with the possibility to join several modules.
- Plinths/base.
- Eyebolt.
- Swing rack.
- All types of ventilation.
- Cable entry cover.
- Metal legs and wheels.
- Transparent tempered glass or with safety glass.
- Manufactured in stainless steel AISI 316L EN 14404.
- Mounting plate insulation (bakelite) or stainless steel.
- EMC version according to 2014/30/UE of electromagnetic compatibility.

MODULAR DISTRIBUTION WALL CABINETS TITAN SERIES IP66

PLAN

CLICK HERE TO DOWNLOAD
THE FILES CAD - PLANS - CERTIFICATES

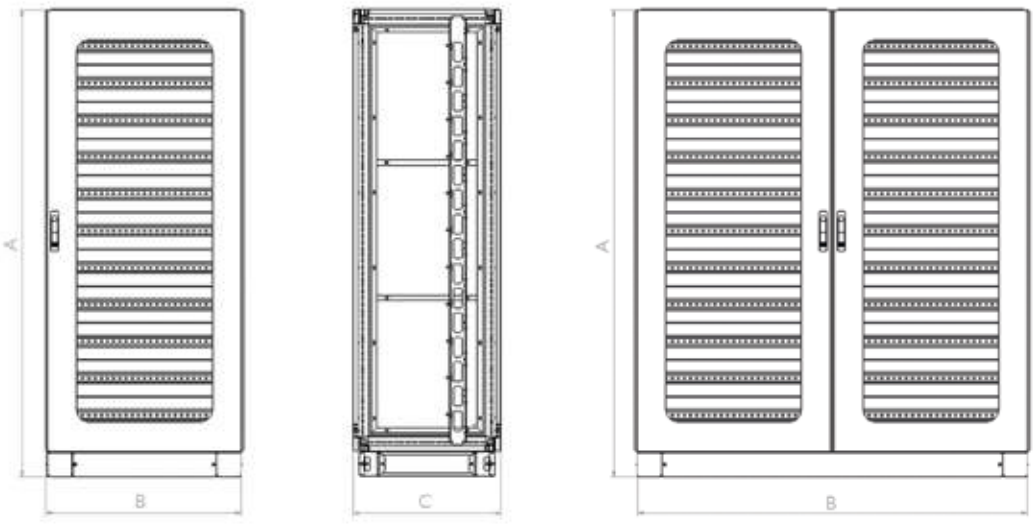

10 YEARS
STAINLESS ANTICORROSIVE **GUARANTEE**

5 YEARS
MECHANICAL PARTS **GUARANTEE**

REFERENCES I DOOR



REFERENCES	DIMENSIONS (mm)					
BLIND DOOR	HEIGHT -A-	WIDTH -B-	DEPTH -C-	ROWS	MODULES BY ROW	TOTAL MODULES
MVAF126040Q	1200	600	400	7	22	154
MVAF126060Q			600			
MVAF126080Q			800			
MVAF128040Q		800	400		33	231
MVAF128060Q			600			
MVAF128080Q			800			
MVAF146040Q	1400	600	400	8	22	176
MVAF146060Q			600			
MVAF146080Q			800			
MVAF148040Q		800	400		33	264
MVAF148060Q			600			
MVAF148080Q			800			
MVAF166060Q	1600	600	600	9	22	198
MVAF166080Q			800			
MVAF168060Q		800	600		33	297
MVAF168080Q			800			
MVAF186040Q	1800	600	400	11	22	242
MVAF186050Q			500			
MVAF186060Q			600			
MVAF186080Q			800			
MVAF188040Q		800	400		33	363
MVAF188050Q			500			
MVAF188060Q			600			
MVAF181040Q		1000	400		44	484
MVAF181050Q			500		44	484
MVAF181060Q			600		44	484
MVAF181240Q		1200	400		55	605
MVAF181250Q			500			
MVAF181260Q			600			
MVAF206040	2000	600	400	12	22	246
MVAF206050			500			
MVAF206060			600			
MVAF206080			800			
MVAF208040		800	400		33	396
MVAF208050			500			
MVAF208060			600			
MVAF208080			800			
MVAF201040		1000	400		44	528
MVAF201050			500		44	528
MVAF201060			600		44	528
MVAF201080			800			
MVAF226060	2200	600	600	13	22	286
MVAF226080			800			
MVAF228060		800	600		33	429
MVAF228080			800			
MVAF221060		1000	600		44	572
MVAF221080			800			
Version Norms UL	Add "UL" to the reference. Ex "MVAF126040UL"					

REFERENCES 2 DOORS

REFERENCES	DIMENSIONS (mm)					
BLIND DOOR	HEIGHT -A-	WIDTH -B-	DEPTH -C-	ROWS	MODULES BY ROW	TOTAL MODULES
MVAF181050/2Q	1800	1000	500	11	37	407
MVAF181060/2Q			600		37	407
MVAF208010/2	2000	800	1000	12	26	312
MVAF201040/2		1000	400		37	444
MVAF201050/2			500		37	444
MVAF201240/2		1200	400		48	576
MVAF201250/2			500			
MVAF201260/2			600			
MVAF201280/2			800			
MVAF221080/2	2200	1000	800	13	37	481
MVAF221260/2		1200	600		48	624
MVAF221280/2			800			
Version Norms UL	Add "UL" to the reference. Ex "MVAF126040UL"					

MODULAR DISTRIBUTION WALL CABINETS

TRIBECA SERIES IP66



Examples



With a Capacity Up to 962 Modules

Very robust and compact enclosure made with high quality materials. It can withstand high electrical and mechanical stress. Made in AISI 304L stainless steel (polished). With a capacity up to 962 modules for differential placement and circuit breakers.

The enclosure and its wide range of accessories are designed for an easy installation, intuitive, fast and safe, also allowing compositions of one or more bodies.

The rows are standard tops 150 mm high. Transparent polycarbonate door combines high impact resistance (250 times stronger than glass) with excellent re resistance (UL 94). With UV protection and suitable for outdoor applications.

A compact design with drainage channel, polyurethane gasket and concealed hinges guarantees protection and resistance. All enclosures are sent with a protective film.

Easy and smooth opening with swing handle and four locking points, easy to x on the oor itself (plinth is recommended).

Tribeca Series is also available in mild steel (painted).

FOR MORE INFORMATION CLICK HERE

MODULAR DISTRIBUTION WALL CABINETS **TRIBECA SERIES** IP66

APPLICATIONS

Specially designed for all types of low-voltage switchboards, secondary or tertiary terminals and industrial environments. Also for residential, tertiary and industrial environments up to 1000A.
For environments where a esthetics is required and also durability and superior cleaning for painted enclosures or outdoor installations.

NORMATIVE

- Properties blind door:
  - IP66 (IP55 for 2 doors) according to IEC EN 62208 and EN 60529.
  - Degree resistance IK10 according to IEC 62208 and EN 50102.
  - UL Nema 4x, 12, 3r, 1. File Nº E342220.
- Properties transparent polycarbonate door:
  - IP55 according to IEC EN 62208 and EN 60529.
  - Degree IK7 resistance according to IEC 62208 and EN 50102.
  - Light transmission of 89% and protection from UV rays.
  - Resistance to fire: UL94.
  - Fire classification: BS476 part 7, class IA (5 and 6 mm)
- A system which allows making distributions according to EN 60439-1 standard.
- Manufactured following EU low voltage ruling 2014/35/UE.
- Materials intended to come into contact with food EC 1935/2004 and RoHs compliant.
- Maximum voltage 1000 V.
- Temperature resistant: -40°C +100°C (short time +160°C).
- Option silicone gasket: from -60°C to +180°C (short time up to +350°C).

ADVANTAGES

- Wide view of the modules
- Easy mounting on DIN rail.
- Supports up to 1000 A and allow sealing to IP66 (on request and with blind doors).
- Two options: blind door or transparent polycarbonate door. One or two revolving doors easily removable (120°).
- Wide range of dimensions of width and depth to allow total exibility in the structures link.
- 100 % steel, from the handle to the opening system.
- Standard enclosures include a locking system with handle and four locking points, also concealed stainless-steel hinges.
- Delvalle made by order any size that suits your needs including holes and drills on both doors and/or walls.

OPTIONS

- Made to measure based on your needs with a choice of two doors (from 1200mm width).
- Plinths/base.
- Castors.
- Metal legs.
- Transparent door with safety glass.
- Manufactured in stainless steel AISI 316L EN 14404.
- Mounting plate insulation (bakelite) or stainless steel.
- EMC version according to 2014/30/UE of electromagnetic compatibility.

MODULAR DISTRIBUTION WALL CABINETS **TRIBECA SERIES** IP66

PLAN

CLICK HERE TO DOWNLOAD
THE FILES CAD - PLANS - CERTIFICATES

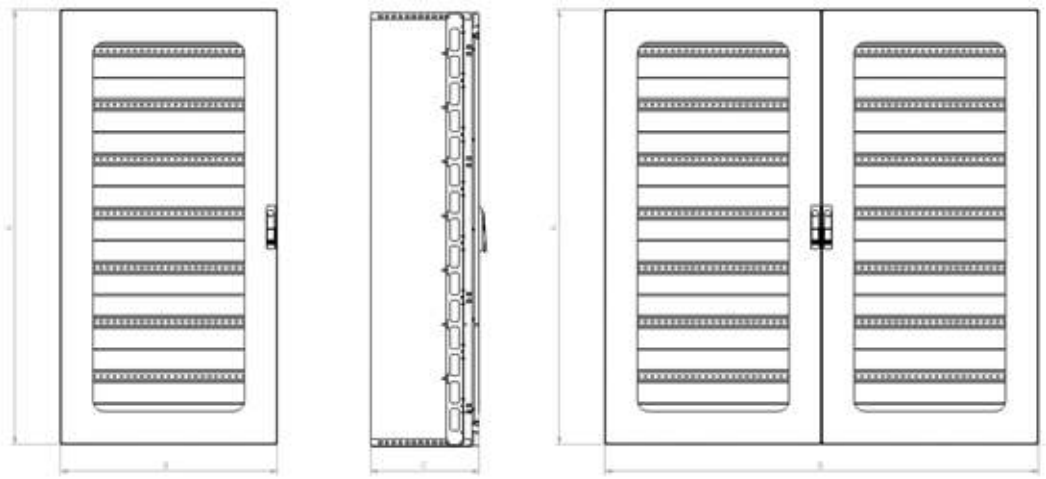

10 YEARS
STAINLESS ANTICORROSIVE **GUARANTEE**

5 YEARS
MECHANICAL PARTS **GUARANTEE**

REFERENCES 1 DOOR

REFERENCES		DIMENSIONS (mm)									
BLIND DOOR	POLYCARBONATE DOOR	HEIGHT -A-	WIDTH -B-	DEPTH -C-	ROWS	MODULES BY ROW	TOTAL MODULES	INSIDE HEIGHT	INSIDE WIDTH	INSIDE DEPTH	PLATE MEASURES
MVAC166040Q	MVACT166040Q	1650	600	400	11	26	286	1566	546	370	340
MVAC168040Q	MVACT168040Q		800			37	407		746		
MVAC161040Q	MVACT161040Q		1000			48	528		946		
MVAC161240Q	MVACT161240Q		1200			52	572		1146		
MVAC186040Q	MVACT186040Q	1800	600	400	12	26	312	1716	546	370	340
MVAC188040Q	MVACT188040Q		800	400		37	444		746	370	340
MVAC188050Q	MVACT188050Q			500						470	440
MVAC181040Q	MVACT181040Q		1000	400		48	576		946	370	340
MVAC181050Q	MVACT181050Q			500						470	440
MVAC206040Q	MVACT206040Q	2000	600	400	13	26	338	1916	546	370	340
MVAC208040Q	MVACT208040Q		800	400		37	481		746	370	340
MVAC208050Q	MVACT208050Q			500						470	440
MVAC201040Q	MVACT201040Q		1000	400		48	624		946	370	340
MVAC201050Q	MVACT201050Q			500						470	440
Version: Normative UL		Add "UL" to the reference. Ex "MVAC166040QUL"									

Separation depth plate 20 mm

REFERENCES 2 DOORS

REFERENCES		DIMENSIONS (mm)									
BLIND DOOR	POLYCARBONATE DOOR	HEIGHT -A-	WIDTH -B-	DEPTH -C-	ROWS	MODULES BY ROW	TOTAL MODULES	INSIDE HEIGHT	INSIDE WIDTH	INSIDE DEPTH	PLATE MEASURES
MVAC181240Q	MVACT181240Q	1800	1200	400	12	54	624	1716	1146	370	340
MVAC181250Q	MVACT181250Q			500						470	440
MVAC201240Q	MVACT201240Q	2000	1200	400	13	52	676	1916	1146	370	340
MVAC201250Q	MVACT201250Q			500						470	440
MVAC201440Q	MVACT201440Q		1400	400		63	819		1346	370	340
MVAC201450Q	MVACT201450Q			500						470	440
MVAC201640Q	MVACT201640Q		1600	400		74	962		1546	370	340
MVAC201650Q	MVACT201650Q			500						470	440
Version: Normative UL		Add "UL" to the reference. Ex "MVAC166040QUL"									

Separation depth plate 20 mm

MODULAR DISTRIBUTION WALL CABINETS

LUXOR SERIES IP66



Examples



Most Capacity Module in the Market

Robust and compact enclosure.
Designed for wall mounted installations up to 472 modules for differential placement and circuit breakers.
Compact enclosure for perfect sealing and resistance with drainage channel, polyurethane joint, concealed hinges and double-bit locks in A316 stainless steel.They include a protective lm that prevents scratches and abrasions during handling.
The rows are standard tops 150 mm high.
The transparent polycarbonate door combines high impact resistance (250 times stronger than glass) with excellent re resistance (UL94). With UV protection and suitable for outdoor applications.
Easy opening by smooth-turning locks, maximum opening of the doors (up to 120°), maximum working width for your assemblies, easily removable, polished surface, great performance.
Luxor series is also available in mild steel (painted). We also have embedded enclosures (Bally type).

FOR MORE INFORMATION CLICK HERE



MODULAR DISTRIBUTION WALL CABINETS **LUXOR SERIES** IP66

APPLICATIONS

Specially designed for all types of low-voltage switchboards, secondary or tertiary terminals and industrial environments. Also for residential, tertiary and industrial environments up to 1000A.
For environments where a esthetics is required and also durability and superior cleaning for painted enclosures or outdoor installations.

NORMATIVE

- Properties blind door:
  - IP66 (IP55 for 2 doors) according to IEC EN 62208 and EN 60529.
  - Degree resistance IK10 according to IEC 62208 and EN 50102.
  - UL Nema 4x, 12, 3r, 1. File N° E342220.
- Properties transparent polycarbonate door:
  - IP55 according to IEC EN 62208 and EN 60529.
  - Degree IK7 resistance according to IEC 62208 and EN 50102.
  - Light transmission of 89% and protection from UV rays.
  - Resistance to fire: UL94.
  - Fire classification: BS476 part 7, class IA (5 and 6 mm).
- A system which allows making distributions according to EN 60439-1 standard.
- Manufactured following EU low voltage ruling 2014/35/UE.
- Materials intended to come into contact with food EC 1935/2004 and RoHs compliant.
- Maximum voltage 1000 V.
- Temperature resistant: -40°C +100°C (short time +160°C).
- Option silicone gasket: from -60°C to +180°C (short time up to +350°C).

ADVANTAGES

- Wide view of the modules.
- Easy mounting on DIN rail.
- They are designed with different dimensions of width and depth to allow total exibility in their facilities.
- Supports up to 1000 A and allow sealing to IP66 (on request and with full doors).
- Two options: blind door or transparent polycarbonate door.
- Delvalle made by order any size that suits your needs, including holes and drills on both doors and/or walls.

OPTIONS

- Made to measure based on your needs.
- Possibility of two doors (from 800x600).
- 170° hinge that allows maximum opening for easy access to the cabinet without removing the door.
- Plinths/base.
- Metal legs.
- Wall support (not included in the standard model).
- Transparent door with safety glass.
- Manufactured in stainless steel AISI 316L EN 14404.
- Mounting plate insulation (bakelite) or stainless steel.
- EMC version according to 2014/30/UE of electromagnetic compatibility.

MODULAR DISTRIBUTION WALL CABINETS **LUXOR SERIES** IP66

PLAN

CLICK HERE TO DOWNLOAD
THE FILES CAD - PLANS - CERTIFICATES

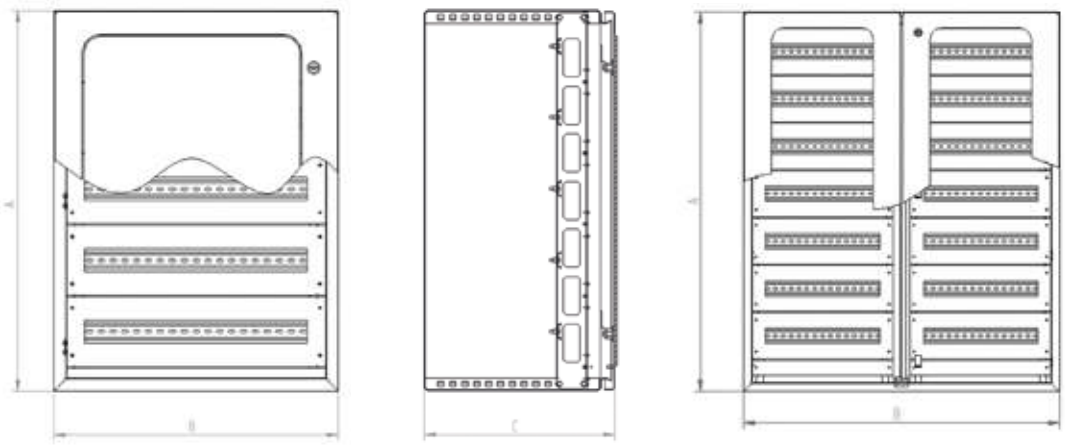

10 YEARS
STAINLESS ANTICORROSIVE **GUARANTEE**

5 YEARS
MECHANICAL PARTS **GUARANTEE**

REFERENCES I DOOR

REFERENCES		DIMENSIONS (mm)										
BLIND DOOR	POLYCARBONATE DOOR	HEIGHT -A-	WIDTH -B-	DEPTH -C-	ROWS	MODULES BY ROW	TOTAL MODULES	INSIDE HEIGHT	INSIDE WIDTH	INSIDE DEPTH	MACHINABLE AREA	
											DOOR	SIDE
MVAB302015Q	MVAB302015TQ	300	200	155	2	3	6	237	6	135	207x70	270x105
MVAB383015Q	MVAB383015TQ	380	300		2	9	18	317	18	135	287x170	350x105
MVAB383021Q	MVAB383021TQ	380	300	210	2	9	18	317	18	190	287x170	350x160
MVAB603815Q	MVAB603815TQ	600	380	155	4	13	52	537	52	135	507x250	570x105
MVAB603821Q	MVAB603821TQ	600	380	210	4	13	52	537	52	190	507x250	570x160
MVAB404021Q	MVAB404021TQ	400	400		2	15	30	337	30		307x270	370x160
MVAB504021Q	MVAB504021TQ	500			3	15	45	437	45		407x270	470x160
MVAB505021Q	MVAB505021TQ	500	500		3	20	60	437	60		407x270	470x160
MVAB705021Q	MVAB705021TQ	700			4	20	80	637	80		607x370	670x160
MVAB605021Q	MVAB605021TQ	600			4	20	80	537	80		507x370	570x160
MVAB606021Q	MVAB606021TQ	600	600		4	26	104	537	104		507x470	570x160
MVAB806030Q	MVAB806030TQ	800	600	300	5	26	130	737	130	280	707x470	770x250
MVAB808030Q	MVAB808030TQ	800	800		5	37	185	737	185		665x630	770x250
MVAB108030Q	MVAB108030TQ	1000			6	37	222	937	222		865x630	970x250
MVAB128030Q	MVAB128030TQ	1200			8	37	296	1137	296		1065x630	1170x250
MVAB101030Q	MVAB101030TQ	1000	1000		6	48	288	937	288		865x830	970x250
MVAB121030Q	MVAB121030TQ	1200			8	48	384	1137	384		1065x830	1170x250
*MVAB121230Q	*MVAB121230TQ	1200	1200		8	59	472	1146	472	275	1006x976	1170x240
*MVAB101230Q	*MVAB101230TQ	1000			6	59	354	946	354		806x976	970x240
Version: Normative UL - Nema		Add "UL" to the reference. Ex "MVAB302015QUL"										

* Closing lever. Separation depth plate 20mm

REFERENCES 2 DOORS

REFERENCES		DIMENSIONS (mm)										
BLIND DOOR	POLYCARBONATE DOOR	HEIGHT -A-	WIDTH -B-	DEPTH -C-	ROWS	MODULES BY ROW	TOTAL MODULES	INSIDE HEIGHT	INSIDE WIDTH	INSIDE DEPTH	MACHINABLE AREA	
											DOOR	SIDE
MVAB806030DQ	MVAB806030DTQ	800	600	300	5	18	90	746	546	270	260 x 125	260 x 130
MVAB808030DQ	MVAB808030DTQ	800	800		5	30	150	746	746		260 x 225	260 x 230
MVAB108030DQ	MVAB108030DTQ	1000			6		180	946			360 x 225	360 x 230
MVAB128030DQ	MVAB128030DTQ	1200			8		240	1146			460 x 225	460 x 230
MVAB101030DQ	MVAB101030DTQ	1000	1000		6	41	246	946	946		360 x 325	360 x 330
MVAB121030DQ	MVAB121030DTQ	1200			8		328	1146			460 x 325	460 x 330
MVAB121230DQ	MVAB121230DTQ	1200	1200		8	52	416	1146	1146		460 x 425	460 x 430
Version: Normative UL - Nema		Add "UL" to the reference. Ex "MVAB302015QUL"										

Separation depth plate 20mm

CLIMATE CONTROL COOLING FOR ELECTRICAL ENCLOSURES



FILTER FANS PRIUS SERIES IP54 IP55



Example



Example with casing

Maximum Reliable and Efficient

Built-in filter fan high performance, low power, and soundless, with slim design, only 4 mm and affordable price.
These fans are ideal for the removal of large heat loads inside the cabinets in an economical and easy way.
Its compact design, easy mounting and disassembly for quick cleaning make it ideal for use in any heat dissipation inside the enclosure. Quick assembly thanks to the mounting fast "Clip-on" with self-adhesive gasket.
Specially designed for use in installations that need a high level of protection IP54 / IP55.

FOR MORE INFORMATION CLICK HERE

FEATURES

- Life time +50.000 hours in 40°C.
- ECOfriendly: low consumption, high efficiency and very silent.
- Mounting fast "Clip-on".
- Self-adhesive gasket.
- Air flow direction"inside-out".
- Ball bearing.
- Panels with thickness in range 1.2 - 2.4 mm.
- Operating temperature -10 /+70°C.
- Duty cycle 100%.
- The fan is supplied with filter designed with easy cleaning and high resistance.
- Also in stainless steel version, with casing.

OPTIONS

- We recommend install our thermostats (*).
- EMC Electromagnetic Compatible Version.
- IP55 with special filter with casing RAL 7035.
- Flow direction "outside-in".
- UL approved (Underwriters Laboratories) File Nº E301228.
- RAL 7032 (grey) and RAL 9005 (black).
- Stainless Steel Version AISI 304L.

NORMATIVE

- IP54/Class I Norm IEC 60529.
- Built directive 2014/35/UElow voltage.
- Operating temperature -10°C +70°C.
- Filter mat (Eurovent) EU2 and EU3 (depending on model)
- Material ABS UL94V-O RAL 7035.
- Life time +50.000 hours at 40°C.

FILTER FANS PRIUS SERIES IP54 IP55

PLAN AND REFERENCES FAN

CLICK HERE TO DOWNLOAD
THE FILES CAD - PLANS - CERTIFICATES

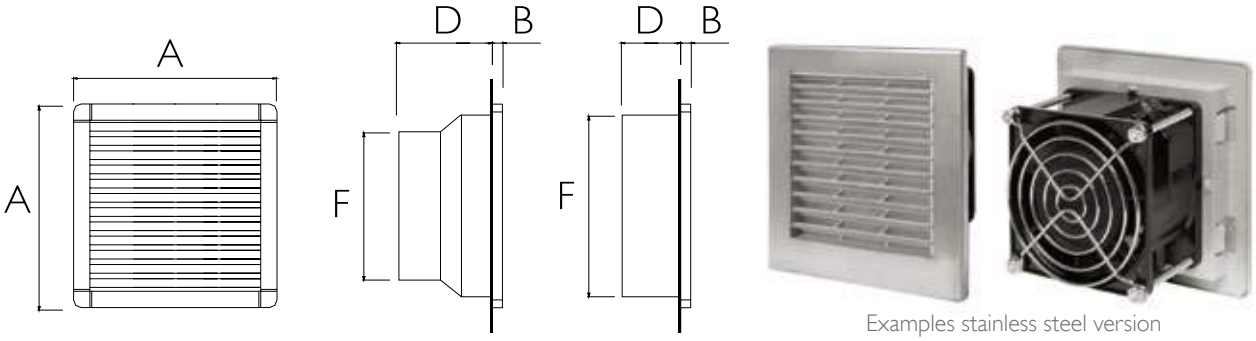

Examples stainless steel version

REFERENCE - FEATURES FAN									DIMENSIONS (mm)					
REFERENCE	AIR FLOW	POWER SUPPLY	POWER	CONSUMTION	CURRENT CONSUMPTION	ELECTRIC CONNECTION	NOISE	FILTER MAT (EUROVENT)	MACHINING MOUNTING	A	B	C	D	F
MVP024AS	24m³/h	230V/50-60Hz	13W	0,10A	Impedance	faston 2,8x0,5mm	30dB	EU2	92x92 $^{+0,5}_{0}$	114	4	12	53	90
MVP024BS		115V/50-60Hz		0,14A										
MVP024DS		12VCD	3W	0,25A		2-pole terminal 1,5mm²	35dB						41	
MVP024ES		24VCD	4W	0,16A										
MVP055AS	55m³/h	230V/50-60Hz	22W	0,14A		faston 2,8x0,5mm	43dB	EU3	125x125 $^{+I}_{-I}$	150	5,5	22	71	124
MVP055BS		115V/50-60Hz		0,26A										
MVP055ES		24VCD	9W	0,37A		2-pole terminal 1,5mm²	45dB							
MVP055FS		48VCD	13W	0,27A										
MVP120AS	120m³/h	230V/50-60Hz	22W	0,14A		faston 2,8x0,5mm	43dB		177x177 $^{+I}_{0}$	204	5,5	23	92	121
MVP120BS		115V/50-60Hz		0,26A										
MVP120ES		24VCD	9W	0,37A		2-pole terminal 1,5mm²	45dB							
MVP120FS		48VCD	13W	0,27A										
MVP230AS	230m³/h	230V/50-60Hz	40W	0,17A	Thermal	3-pole terminal 2,5mm²	53dB		224x224 $^{+I}_{-I}$	250	5,5	24	113	174
MVP230BS		115V/50-60Hz		0,34A										
MVP230ES		24VCD	26W	1,08A	Impedance		61dB						104	218
MVP230FS		48VCD	33W	0,68A										
MVP370AS	370m³/h	230V/50-60Hz	70W	0,40A	Thermal	4-pole terminal 1,5mm²	65dB		291x291 $^{+I}_{0}$	320	5,5	24	145	220
MVP370BS		115V/50-60Hz		0,80A										
MVP370CS		400V/50-60Hz	60W	0,18A										
MVP500AS	500m³/h	230V/50-60Hz	70W	0,40A		3-pole terminal 2,5mm²	65dB							
MVP500BS		115V/50-60Hz		0,80A										
MVP500CS		400V/50-60Hz	60W	0,18A										
MVP630AS	630m³/h	230V/50-60Hz	130W	0,55A		4-pole terminal 1,5mm²	72dB							270
MVP630BS		115V/50-60Hz		1,10A										

Version flow direction "*outdoor-in*"	Delete "S" to the reference. Ex "MVP024A"
Version Normative UL	Add "UL" to the reference. Ex "MVP024ASUL"
Version EMC	Add "M" to the reference. Ex "MVP024ASM"
Stainless steel version	Add "X" to the reference. Ex "MVP024ASX"
Version IP55 (case)	Add "5" at the end of the reference. Ex "MVP024AS5"

PLAN AND REFERENCES FILTER GRILLES

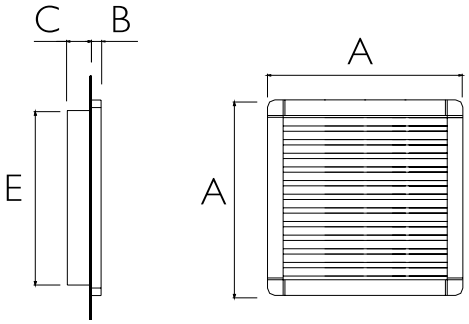

REFERENCE	DIMENSIONS (mm)				
REFERENCE	MACHINING MOUNTING	A	B	C	E
MVPR024	92x92 $^{+0,5}_{0}$	114	4	12	90
MVPR055	125x125 $^{+I}_{-I}$	150	5,5	22	124
MVPR120	177x177 $^{+I}_{0}$	204		23	174
MVPR230	224x224 $^{+I}_{-0}$	250		24	220
MVPR500	291x291 $^{-I}_{0}$	320			290
Version Normative UL	Add "UL" to the reference				
Version EMC	Add "M" to the reference				
Stainless steel version	Add "X" to the reference				

Available pack of 10 loose filters. Ask us for more information

STAINLESS STEEL THERMOELECTRIC COOLER IP67









Examples



Example con carcasa

Easy Installation with Screws

The DelValle stainless steel thermoelectric cooler can be supplied in various types, from 30W to 300W, with a protection up to IP67 between the inside and outside of the panel once inserted. Also, depending on the model chosen, ranging from 2.3 A up to 15A.
By design the thermoelectric cooling is free of any liquid, so there is no risk of leakage.
And thanks to the "Peltier" latest technology developed over the Peltier effect, allows the installation and operation of the device at any position.
Another key feature is the no air exchange between the inside and outside so the dirt doesn't accumulate on the inside.

FOR MORE INFORMATION CLICK HERE

APPLICATIONS

Specially designed for industrial enclosures placed in areas where the components are very sensitive to temperature changes and it's necessary an uniform temperature on the inside, as PLC'S, PC´s, robots, electronic devices, video surveillance,...

SURFACE MOUNT HOUSING

The thermoelectric cooler has an extra structure that can be used if there is no depth inside the enclosure. This option is insteresting for later installations at existing systems.

COOLING AND HEATING

Cooling and heating functions with one device is possible. Just need to add "H" to the reference of exact model.

STAINLESS STEEL THERMOELECTRIC COOLER IP67

FEATURES

- Designed for Indoor - Outdoor.
- Catalogue range that covers all needs.
- Design for water repelling.
- Installation and handling in any position, horizontal, vertical, lying.
- The dirt doesn't accumulate on the inside so the maintenance is near 0.
- Ecofriendly.
- Easy installation with screws.
- Stainless steel envelope.
- Accurate and precise for complex ambience.
- Low power consumption, quick amortization.
- Very reliable operation in any position and resistant to sudden temperature changes

NORMATIVE

- IP67 Norm IEC 60529.
- Approval UL.
- Life time +60.000 hours.
- Comply 2014/35/UE(low voltage directive).
- Comply EN 300386 and EN 55022 (electromagnetic compatibility normative).
- Comply EN 60950 (electrical security normative).

CONDENSATE TROUGH

- Suitable for the types MVTEC 50-150 (MVVE200) and MVTEC 75-300 (MVVE300).
- Collecting of condensate.
- Material: Stainless steel, thickness 1 mm.
- With hose connection, ID = 8 mm.
- Hose with length 2 mtr. is included.

IN CERTAIN SECTORS SUCH AS THE FOOD SECTOR, IT IS REQUIRED A HIGH LEVEL OF HYGIENE TO AVOID INFECTIONS; AND IN SECTORS AS THE MICROBIOLOGICAL, CHEMICAL OR PETROCHEMICAL SECTOR IS VITAL THE RESISTANCE TO THE CHEMICALS AND ENVIRONMENTAL EXTREMES AGENTS. I. IN DELVALLE, WE ARE SPECIALIST ON THIS ISSUE AND WE RECOMMEND THE USE OF OUR ENCLOSURES ANG AIR CONDITIONING AND VENTILATION SYSTEMS IN STAINLESS STEEL

REFERENCES

REFERENCES	MVTEC030E	MVTEC050D	MVTEC50E	MVTEC75E	MVTEC100D	MVTEC100E	MVTEC150E	MVTEC300E
Cooling capacity (W)	30w	50w		75w	100w		150w	300w
Cooling capacity (BTU/H)	102 BTU/h	170 BTU/h		256 BTU/h	341 BTU/h		512 BTU/h	1024 BTU/h
Operating Voltage	24 V DC	12 V DC	24 V DC	24 V DC	12 V DC	24 V DC	24 V DC	24 V DC
Amperage	2,3 A	5,0 A	2,5 A	3,6 A	10,4 A	5,2 A	7,2 A	15 A
Operating temperature	-10... +60° C							
Norms	UL, CE							CE
Function	Cooling							cooling+heating
Degree of Protection Out.	IP65	IP43	IP67	IP67	IP67	IP67	IP67	IP65
Weight	1,7 Kg	3,9 Kg		5,5 Kg	7,2 Kg		7,3 Kg	18,5 Kg

Version cooling + heating	Add "H" to the reference. Ex: MVTEC030EH

ROOF FAN VIPER SERIES IP44 IP54





Example models 600 / 860 / 1000

ECOfriendly: Low Consumption, High Efficiency and Very Silent

Roof fan, specially designed for extracting heat from the top of the cabinet, for achieving a perfect air flow in the inside.
Easy to install, provides protection from IP44 to IP54 depending on the model.
Air flow range from 600 m^3 to 1.500 m^3 per hour, working silent and sealed for both waterproof and dust proof.
Performance and durability, 50,000 hours at 40°C, for clean air inside cabinets.

FOR MORE INFORMATION CLICK HERE

APPLICATIONS

Specially designed for use in the top of our cabinets creating a perfect cooling in the system electrical and electronic equipement.





Example models 1500

ADVANTAGES

- Life time +50.000 hours at 40°C.
- Mounting screws.
- Gasket of polyethylene or PVC (depending on model).
- Air flow direction "inside-out".
- Ball bearing. Maximum engine efficiency and reliability.
- Thermal overload protection.
- Duty cycle 100%.
- With internal security grid that not allow access to the fan wheel.
- The fan is supplied with filter desingned for easy clearing and highly resistant.

Phone +34 945 601 381
comercial@delvalle.es | www.delvallebox.com

ROOF FAN VIPER SERIES IP44 IP54

OPTIONS

- IP54 Version.
- EMC Version.
- UL Version by normative File N° E301228.
- RAL 7032 (grey).

NORMATIVE

- IP44/ Class I. Norm EN 60529.
- Built under 2014/35/UEof low voltage.
- Operating temperature -10 / +70 °C.
- Material ABS UL94V-O. Colour RAL 7035.
- Life time +50.000 hours at 40°C.
- Gasket of polythene.

PLAN AND REFERENCES

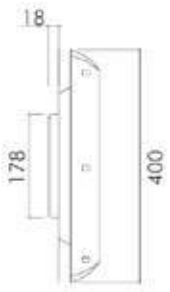

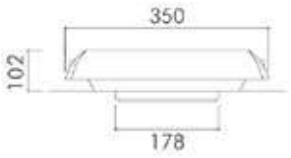

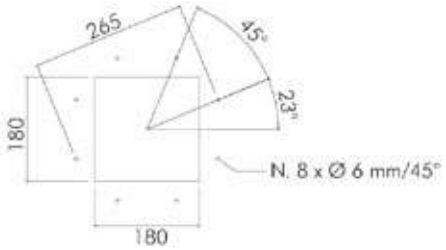

REFERENCE	FEATURES								
REFERENCE	AIR FLOW RATE	POWER SUPPLY	POWER CONSUMPTION	CURRENT CONSUMPTION	ELECTRIC CONNECTION	RUIDO	HIGH (mm)	WIDTH (mm)	HEIGHT (mm)
MVPT0600IP44A	600m³/h	230V/50-60Hz	70W	0,32A	4-pole terminal 2,5mm²	64dB	400	350	102
MVPT0600IP44B		115V/50-60Hz		0,64A					
MVPT0860IP44A	860m³/h	230V/50-60Hz	85W	0,43A		72dB			
MVPT0860IP44A		115V/50-60Hz		0,86A					
MVPT1000IP44A	1000m³/h	230V/50-60Hz	120W	0,50A		72dB			
MVPT1000IP44B		115V/50-60Hz		1,00A					
Version Normative UL	Add "UL" a la referencia								
Version EMC	Add "M" a la referencia								
Version IP54	Change "IP44" for "IP54" in the reference								

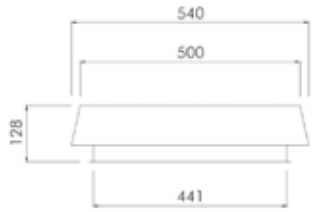

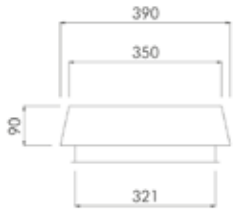

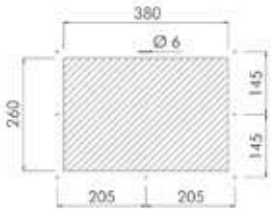

REFERENCE	FEATURES								
REFERENCE	AIR FLOW RATE	POWER SUPPLY	POWER CONSUMPTION	CURRENT CONSUMPTION	ELECTRIC CONNECTION	RUIDO	HIGH (mm)	WIDTH (mm)	HEIGHT (mm)
MVPT1500IP44A	1500m³/h	230V/50-60Hz	160W	0,70 A	4-pole terminal	74dB	540	3901	28
MVPT1500IP44B		115V/50-60Hz		1,40A					
Version IP54	Change "IP44" for "IP54" in the reference								

UL RESISTANCE HEATERS MAX SERIES





Examples heaters without fan 10 / 20 / 30 / 45 W





Examples heaters without fan 60 / 75 / 100 / 150 W





Examples heaters with fan 130 / 250 / 400 W

NORMATIVE

- UL approved. File N° E351869
- Built under directive 2014/35/UElow voltage.

Simple and Quick Mounting

Temperature variations inside control cabinets and housings, especially when installed outside, lead to condensation of water and consequently to malfunction and corrosion. Through the use of enclosure heaters, temperature variations can be reduced and condensation of water avoided
The heaters are equipped with a PTC heating elements and are self-regulating, operate without temperature control and have a thermal output that varies only little over a wide voltage range.
An optimum heat dissipation is achieved through profiled aluminum housings with small dimensions
Heaters for thermal outputs of 130W to 1000W are equipped with fans in order to produce an air circulation.

FOR MORE INFORMATION CLICK HERE

APPLICATIONS

Enclosure heaters are used in traffic light, traffic monitoring systems, ticket machines, crane systems, telecommunication systems as well as in machines for foodstuff industry.

ADVANTAGES

- Self-regulating PTC.
- Simple and quick mounting in DIN 35mm
- Attachment with clip on mounting rail.
- Optimized profile with improved heating power and smaller surface temperature.
- Alternative for voltage ranges 12-24v or 110-240V.

RESISTENCIAS CALEFACTORAS UL SERIE MAX

REFERENCES






REFERENCE	FEATURES								
REFERENCE	THERMAL OUTPUT AT 20°C	HEATING ELEMENT	WORK TEMPERATURE	VOLTAGE (AC/DC)	CONNECTING	PROTECTION RATING	HEIGHT (mm)	WIDTH (mm)	DEPTH (mm)
MVRC0010UL	10W	PTC	-40°C …. +70°C	100-240V 12-24V	2 pole spring cage terminal	IP20 Clase II	80	30	60
MVRC0020UL	20W						100		
MVRC0030UL	30W						120		
MVRC0045UL	45W						170		

Assembly and connections without tool. Connection with spring-cage terminal.






REFERENCE	FEATURES								
REFERENCE	THERMAL OUTPUT AT 20°C	HEATING ELEMENT	WORK TEMPERATURE	VOLTAGE (AC/DC)	CONNECTING	PROTECTION RATING	HEIGHT (mm)	WIDTH (mm)	DEPTH (mm)
MVRC0060UL	60W	PTC	-40°C …. +70°C	100-240V 12-24V	2 pole spring cage terminal	IP20 Clase II	105	80	83
MVRC0075UL	75W						155		
MVRC0100UL	100W						185		
MVRC0150UL	150W						245		

Connection with screw terminals





REFERENCE	FEATURES								
REFERENCE	THERMAL OUTPUT AT 20°C	HEATING ELEMENT	WORK TEMPERATURE	VOLTAGE (AC/DC)	CONNECTING	PROTECTION RATING	HEIGHT (mm)	WIDTH (mm)	DEPTH (mm)
MVRC130UL	130W	PTC	-40°C …. +60°C	230V 115V	2 pole spring cage terminal	IP20 Clase I	155	80	110
MVRC250UL	250W						155		
MVRC400UL	400W						235		

Heaters with fan for optimal air circulation. Pluggable terminal block.

THERMOSTATS AND THERMO-HYGROSTATS



Example termostat





Example termostats dual



Example termo-hygrostat



Example hygrostat

Compact Design and High Capacity

Thermostats and hygrostats for racks and cabinets, of small size, dual function, heat, cold,... All of them easy to install, reliable, economical and accurate, adaptable to any ventilation unit or heat resistance of our catalogue.
The Electromechanical Humidistat which automatically controls the humidity inside the electrical panels, sends the signal to the fan or heater, depending on what it is necessary, to prevent any condensation inside the electrical panel. The LED light notifies of the operation status.

FOR MORE INFORMATION CLICK HERE

FEATURES

- Compact design.
- High capacity NO or NC contact.
- Maximum reliability and efficiency.
- Mounting on DIN rail 35 mm.
- Service life >10.000 cycles.
- Contact resistance < 10 mOhm.
- Ecofriendly product.

NORMATIVE

- IP20 Norm IEC 60529.
- Built under directive 2014/35/UElow voltage.
- Service life >10.000 cycles
- UL approved. File N° E348803
- Mounting on DIN rail 35 mm EN 50022
- Casing PA6, UL94 V0 auto power off.
- Colour RAL 7035.

REFERENCES

REFERENCE	FEATURES					
REFERENCE	TYPE	DIMENSIONS (mm)	WEIGHT	TEMPERATURE RANGE	HYSTERESIS / HYSTERESIS RELATIVE HUMIDITY	ELECTRICAL CONNECTIONS
MVKTMM1140	Termostat NO	61x34x35	48	-25 +80°C	7°C (tolerance +/-4)	2 pole terminal 2,5 mm² wire
MVKTMM1141	Termostat NC					
MVKTMM1142	Termostat dual NO/NC	61x53x35	80			
MVKT205	Termostat dual	34x86x62,5	110	0/20°C - 30/50°C	ca. 1K	Screw terminals 0,5/,2,5mm²
MVKH35	Higrostat	91x54x48	170	-10 +50	5%	3-pole terminal for 2,5mm² wire
MVKTMM1143B	Termo Higrostat	61x53x35	105	-20 +80°C		1 pole terminal 2,5 mm² wire
MVKTMM1143A						

Contact NC (red): Typically used for controlling heaters. Contact NO (blue): Typically used for controlling ventilation devices.

VENT DRAINS FOR THERMOELECTRIC COOLERS AND ENCLOSURES IP66





Examples

Helps Reduce Corrosion that Can Limit the Life of Internal Electronic Components

The vent drains allows accumulated water to drain out the bottom of an electrical enclosure. The UL UL/cUL, NEMA Type 4, 4X vent drains also function as an air pressure equalizer, reducing the harmful effects of temperature-induced vacuums that could pull water and moisture into the enclosure.
We have a model in stainless steel AISI 304 and another of corrosion-resistant polyester.

FOR MORE INFORMATION CLICK HERE

FEATURES

- Uses gravity to remove collected liquids.
- One-way mechanical shut-off when pressure is equalized prevents water and contaminants from entering the enclosure.
- Helps reduce corrosion that can limit the life of internal electronic components.
- Maintains enclosures UL Type rating when properly installed.

OPTION

- Stainless steel AISI 304 (Ø35 mm x 67 mm).
- Corrosion-resistant polyester (Ø32 mm x 67 mm).

NORMATIVE

- Certificate UL Nema 4x, 12, 3r, 1.
- IP(W)66 corrosive environments.

VENT DRAINS FOR THERMOELECTRIC COOLERS AND ENCLOSURES IP66

INSTALLATION

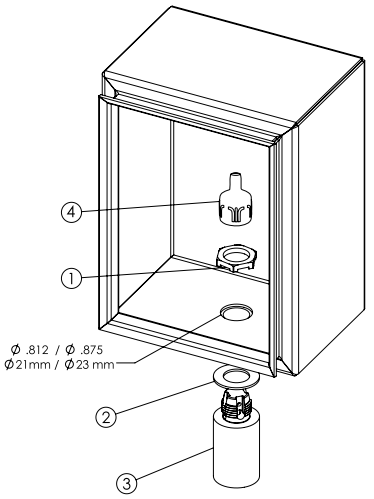

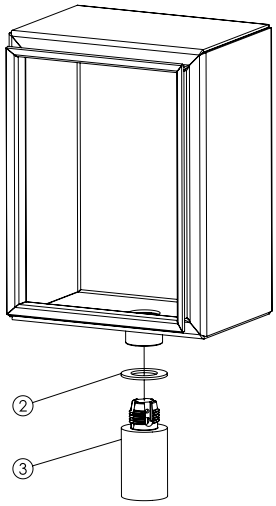



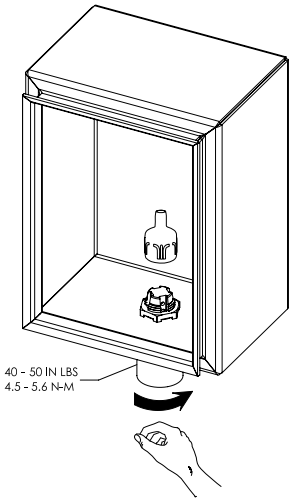

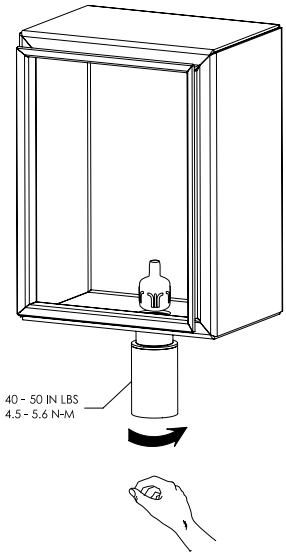

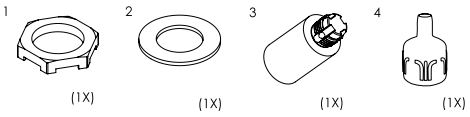

DIMENSIONS AND REFERENCES





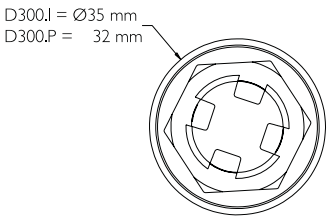

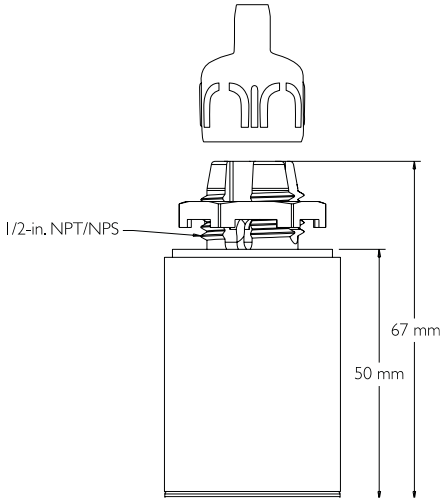

REFERENCES	FEATURES (mm)		
REFERENCES	DESCRIPTION	HIGH (mm)	Ø (mm)
MVVD300.I	Stainless steel AISI 304	67	35
MVVD300.P	Corrosion-resistant polyester	67	32

delvalle®

Consult us without obligation

Confidentiality, reliability & quality

DELVALLE OFFERS
OTHER SOLUTIONS

FOR MORE INFORMATION CLICK HERE

www.delvallebox.com
comercial@delvalle.es
+34 945 601 381
ALSO ONLINE

STAINLESS STEEL INDUSTRIAL ENCLOSURES



OUTDOOR HEAVY DUTY ELECTRICAL ENCLOSURES

OUTDOOR TELECOM 19 RACKS & CABINETS



GALVANIZED STEEL ELECTRICAL ENCLOSURES

HYGIENIC DESIGN ENCLOSURES



ALUMINIUM ELECTRICAL ENCLOSURES

Consult us without obligation

Confidentiality, reliability & quality

DELVALLE OFFERS
OTHER SOLUTIONS

FOR MORE INFORMATION CLICK HERE

www.delvallebox.com
comercial@delvalle.es
+34 945 601 381

ALSO ONLINE

WATERPROOF SHEET STEEL ELECTRICAL ENCLOSURES



CLIMATE CONTROL COOLING FOR ELECTRICAL ENCLOSURES

NEMA ELECTRICAL ENCLOSURES TYPE 1-3R-4X-12



MODULAR DISTRIBUTION ENCLOSURES

EMC ELECTRICAL ENCLOSURES SOLUTIONS



CABLE GLANDS & ENTRY SEALS FOR CABINETS

delvalle®

ENCLOSURES & CABINETS FOR SPECIAL REQUIREMENTS



Paso del Prao, 6. 01320 Oyón (Álava). Spain
Telf. +34 945 601 381
www.delvallebox.com - comercial@delvalle.es

Contact us, we will be available at any time