delvalle®

Enclosures & Cabinets for Special Requirements

comercial@delvalle.es | www.delvallebox.com

NEMA ENCLOSURES WITH DISCONNECT SWITCHES

UL NEMA 1 - 3R - 4X - 12



10 YEARS STAINLESS ANTICORROSIVE **GUARANTEE**

2 YEARS MECHANICAL PARTS **GUARANTEE**



WE PUT AT YOUR DISPOSAL

We offer over **45 years** providing solutions to demanding customers who require very specific characteristics and behaviour according to the sector and their needs.

WHEREVER YOU GO

We are committed to working closely with our customers, providing them with **exceptional service** and offering an advanced and extensive range of products with very competitive prices.

HIGH STANDARD OF QUALITY AND SERVICES

We only use materials provided by companies who offer the very **highest quality**, suitable and certified products. Our success is due to top quality assurance: ISO 9001, SGS, UL, TÜV, ISO 14000 and Ohsas 18001.

CUSTOMIZE TOTALLY YOUR ENCLOSURE

Our production systems can give custom-made solutions **on demand.** Every colour from RAL chart is available to be personalized. A variety of protection standards thanks to our own painting facilities.

CONTACT US

Confidentiality, reliability & quality

www.delvallebox.com
comercial@delvalle.es
+34 945 601 381

ALSO ONLINE

Please contact our technical sales department

A team of professionals with high experience and ability to solve all your queries



NEMA ENCLOSURES WITH DISCONNECT SWITCHES



Examples



Disconnect Switches
Nema for Enclosures

Installed on Nema 1, 3r, 4x, 12 enclosures, disconnect switches can be used at both indoor and outdoor applications. Together with a system of enclosure-and-door interlocks, disconnect switches provide an additional level of safety by preventing operators from opening any door when the disconnect switch is energized.
We manufacture both single and multi-door disconnect switches.
Cable Operated System Thinner cable design for more flexibility and lower bend diameter.

UL NEMA 1 - 3R - 4X - 12

APLICATIONS

- Automotive
- Machinery food and beverage
- Packaging
- Oil & Gas
- Water / wastewater
- Paper and packaging
- Utilities and mining
- Industrial manufacturing

FOR MORE INFORMATION CLICK HERE

NEMA ENCLOSURES WITH DISCONNECT SWITCHES

TECHNICAL FEATURES

- Fuse admits Class E, H, J and R
- Switch 30….600A
- Enclosure Options:
  - Painted steel: NEMA 1/3R/4/12
  - Stainless steel or aluminium: NEMA 4/4X





DESIGNS



BASIC DESIGN
Single door cabinet.



2 DOOR DESIGN
Double door design.



3 DOOR DESIGN
Triple door design.



NEMA ENCLOSURES WITH DISCONNECT SWITCHES

MOUNTING



10 YEARS
STAINLESS ANTICORROSIVE **GUARANTEE**

UL
NEMA
1 - 3R - 4X - 12

2 YEARS
MECHANICAL PARTS **GUARANTEE**



REGULATIONS

- IP66 (W) Norm IEC 60529.
- Maximum IK10 resistance Norm IEC 62262
- Manufactured following EU low voltage ruling 2014/35/UE
- Materials intended to come into contact with food EC 1935/2004
- RoHs compliant
- UL approval Nema 4x, 12, 3r; 1. N°File E342220
- Maximum voltage 1000 V
- IEC 60947
- Temperature resistant: -40°C +100°C (short time +160°C.)
- Option silicone gasket: from –60° C to +180° C (short time up to +350° C)
- UL 508 Listed
- UL 98
- CE Marked
- CSA C22.2 N° 4
- Nema 1/3r/4/4x/12

Phone +34 945 601 381
comercial@delvalle.es | www.delvallebox.com

NEMA ENCLOSURES WITH DISCONNECT SWITCHES

PLAN

CLICK HERE TO DOWNLOAD
THE FILES CAD - PLANS - CERTIFICATES

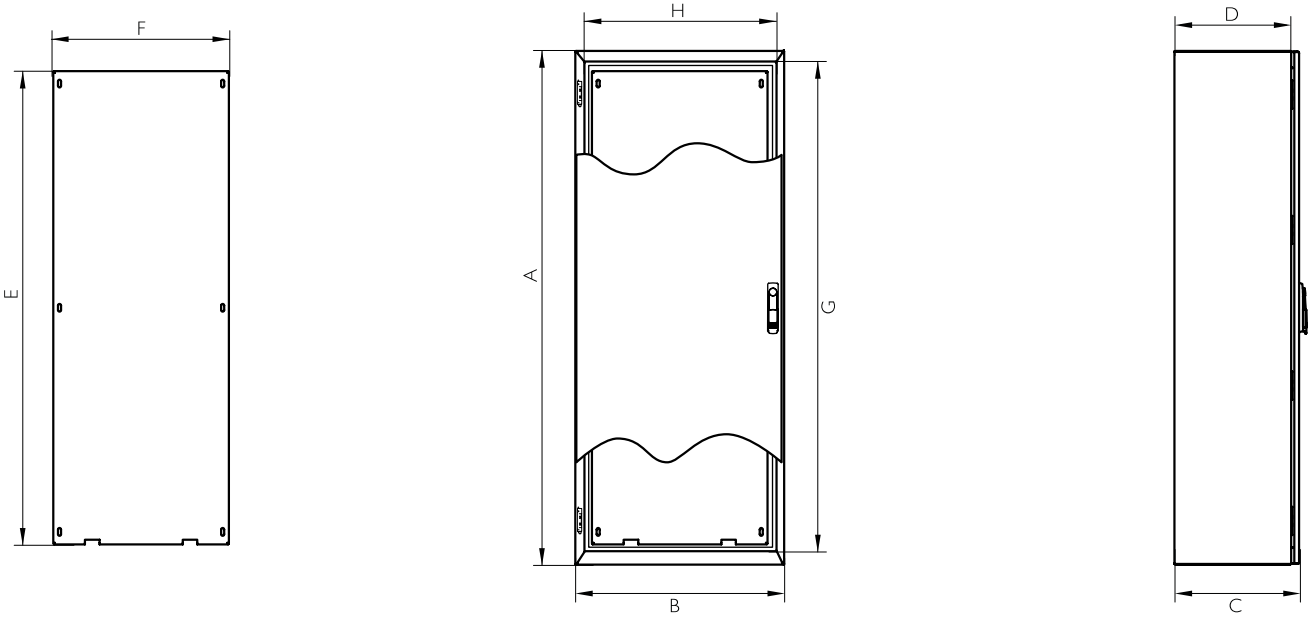

REFERENCES

REFERENCES	DIMENSIONS (mm)										
BLIND DOOR	Nº DOORS	HEIGHT - A -	WIDTH - B -	DEPTH - C -	HOLE ACCESS - GxH -	INSIDE DEPTH - D -	MACHINABLE DOOR AREA	MACHINABLE SIDE AREA	PLATE MEASUREMENT -GxH-	WEIGHT (Kg)	VOLUMEN (m^3)
MVAC165440DSC	1	1650	540	400	1540x430	375	1524.8x414.8	1640x365	1520x470	70,9	0,42
MVAC167440DSC			740		1540x630		1524.8x614.8	1640x365	1520x670	93,25	0,56
MVAC169440DSC			940		1540x830		1524.8x814.8	1640x365	1520x870	111,3	0,70
MVAC185440DSC		1800	540		1690x430		1674.8x414.8	1790x365	1670x470	76,61	0,46
MVAC187440DSC			740		1690x630		1600x540	1790x365	1670x670	100,76	0,61
MVAC187450DSC				500	1690x630	475	1600x540	1790x465	1670x670	107,21	0,76
MVAC189440DSC			940	400	1690x830	375	1600x740	1790x365	1670x870	120,24	0,76
MVAC189450DSC				500	1690x830		1600x740	1790x465	1670x870	127,18	0,95
MVAC205440DSC		2000	540	400	1890x430		1874.8x414.8	1990x465	1870x470	84,68	0,51
MVAC207440DSC			740		1890x630	375	1800x540	1990x365	1870x670	111,19	0,68
MVAC207450DSC				500	1890x630	475	1800x540	1990x465	1870x670	118,13	0,85
MVAC209440DSC			940	400	1890x830	375	1800x740	1990x365	1870x870	132,58	0,85
MVAC209450DSC				500	1890x830	475	1800x740	1990x465	1870x870	140	1,05
MVAC161140DSC	2	1650	1140	400	1540x1030		1524.8x404.2 y 1524.8x437.2	1640x365	1520x1070	129,33	0,84
MVAC181140DSC		1800	1140		1690x1030	375	1674.8x404.2 y 1674.8x437.2	1790x365	1670x1070	139,7	0,91
MVAC181150DSC				500	1690x1030	475	1674.8x404.2 y 1674.8x437.2	1790x465	1670x1070	147,12	1,14
MVAC201140DSC		2000	1140	400	1890x1030	375	1874.8x404.2 y 1874.8x437.2	1990x365	1870x1070	149,61	1,02
MVAC201150DSC				500	1890x1230	475	1874.8x404.2 y 1874.8x437.2	1990x465	1870x1070	157,51	1,26
MVAC201340DSC			1340	400	1890x1230	375	1874.8x604.2 y 1874.8x637.2	1990x365	1870x1270	169,38	1,18
MVAC201350DSC				500	1890x1230	475	1874.8x604.2 y 1874.8x637.2	1990x465	1870x1270	177,76	1,47
MVAC201540DSC			1540	400	1890x1430	375	1810x545 y 1810x545	1990x365	1870x1470	189,12	1,35
MVAC201550DSC				500	1890x1430	475	1810x545 y 1810x545	1990x465	1870x1470	197,99	1,68

Separation depth plate 20mm

delvalle®

Consult us without obligation

Confidentiality, reliability & quality

DELVALLE OFFERS
OTHER SOLUTIONS

FOR MORE INFORMATION CLICK HERE

www.delvallebox.com
comercial@delvalle.es
+34 945 601 381
ALSO ONLINE

STAINLESS STEEL INDUSTRIAL ENCLOSURES



OUTDOOR HEAVY DUTY ELECTRICAL ENCLOSURES

OUTDOOR TELECOM 19 RACKS & CABINETS



GALVANIZED STEEL ELECTRICAL ENCLOSURES

HYGIENIC DESIGN ENCLOSURES



ALUMINIUM ELECTRICAL ENCLOSURES

delvalle®

Consult us without obligation

Confidentiality, reliability & quality

DELVALLE OFFERS
OTHER SOLUTIONS

FOR MORE INFORMATION CLICK HERE

www.delvallebox.com
comercial@delvalle.es
+34 945 601 381

ALSO ONLINE

WATERPROOF SHEET STEEL ELECTRICAL ENCLOSURES



CLIMATE CONTROL COOLING FOR ELECTRICAL ENCLOSURES

NEMA ELECTRICAL ENCLOSURES TYPE 1-3R-4X-12



MODULAR DISTRIBUTION ENCLOSURES

EMC ELECTRICAL ENCLOSURES SOLUTIONS



CABLE GLANDS & ENTRY SEALS FOR CABINETS

delvalle®

Enclosures & Cabinets for Special Requirements





Paso del Prao, 6. 01320 Oyón (Álava). Spain
P. +34 945 601 381
www.delvallebox.com - comercial@delvalle.es

Contact us, we will be available at any time

CE TÜV Rheinland UL CERTIFIED SAFETY US-CA E342220 greenproduct RoHS WEEE