delvalle®

INDUSTRIAL ENCLOSURE SOLUTIONS

comercial@delvalle.es | www.delvallebox.com

FILTER FAN
ZEFIRO SERIES IP54 IP55







FILTER FANS ZEFIRO SERIES IP54 IP55



Example



Polyurethane
Gasket Detail



Compact and Powerful Ventilation for Demanding Environments

Zefiro High-Performance Fan with Easy-Change Filter, Energy Efficiency, and Quiet Operation

With a compact design of only 11 mm thick, the Zefiro fan stands out for its low energy consumption and superior performance. It is specifically designed for rapid heat dissipation in electrical cabinets, keeping systems safe and operational efficiently.

The filter can be changed quickly and easily, facilitating maintenance without the need for additional tools.

Its installation is straightforward thanks to the "clip-on" system with a polyurethane gasket, reducing assembly and disassembly times. Ideal for industrial environments that require efficient ventilation and agile maintenance.

FOR MORE INFORMATION CLICK HERE

APPLICATIONS

Specifically Designed for Installation in Environments Requiring a High Level of Protection IP54 and IP55.



FILTER FANS ZEFIRO SERIES IP54 IP55

FILTER REPLACEMENT IN JUST SECONDS

Our fan is designed with ease and speed of maintenance in mind. In just three simple steps, you can open the unit, replace the filter, and close it again, ensuring your fan is back in operation in a matter of seconds.

Enjoy a hassle-free process that maximizes uptime and minimizes downtime.







EXTRACTION AND BLOWING WITH A CLICK

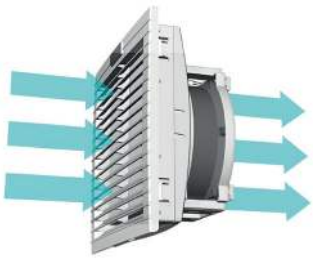

Blower Operation



Extractor Operation



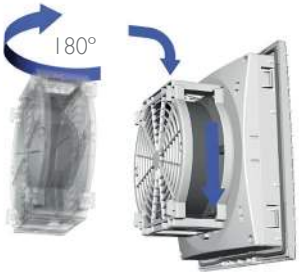

Our fan is the perfect solution for electrical cabinets, functioning both as a blower and an extractor. With just two simple steps, you can change its configuration to adapt to your ventilation needs, ensuring an optimal environment inside the cabinet.

This design not only ensures efficient ventilation but also helps prolong the lifespan of electrical components by preventing overheating. A practical, versatile, and durable solution to protect and maintain your installations in perfect condition.

Install in Seconds, Enjoy Effortless Maintenance

Phone +34 945 601 381
comercial@delvalle.es | www.delvallebox.com

FILTER FANS ZEFIRO SERIES IP54 IP55

FEATURES

- Easy Access Filter and Quick Replacement Without Tools
- Clip-On Mounting for Secure and Agile Installation
- Made of UL94V-O ABS
- Stainless Steel Trim in AISI 304 or AISI 316 for Demanding Environments
- Over 50,000 Hours of Operation at 40°C
- "Inside-Out" Air Direction for Optimal Ventilation
- Self-Adhesive Gasket for Improved Sealing and Durability
- Ball Bearing for Smooth and Reliable Operation
- Maximum Reliability and Energy Efficiency Motor
- Standard Color RAL 7035



OPTIONS

- We Recommend the Installation of Our Thermostats
- EMC Compatible Version
- Air Direction "Outside-In".
- UL Approved File.
- RAL 7032 (Grey)
- IP55 Rated Housing in stainless steel AISI 304 or AISI 316.

OPERATING DIAGRAM

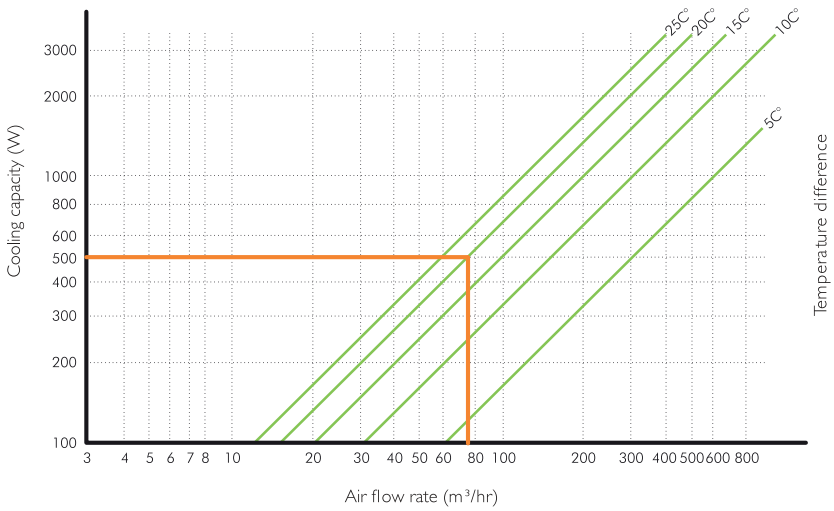

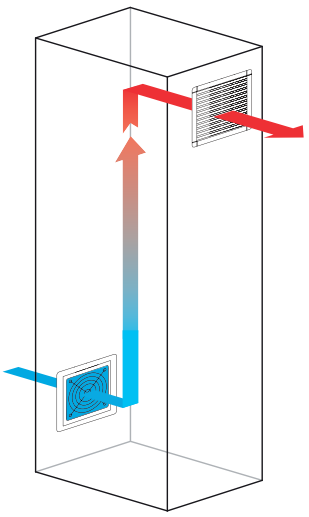

STANDARDS AND REGULATIONS

- Protection Grade for Cabinets IP54/Class I EN 60529.
- Constructed Under Low Voltage Directive 2006/95/CE
- Operating temperature range -10°C-70°C.
- Continuous Filtration Guarantee EU2 and EU3
- UL Certificate, Nema 12.

FILTER FANS ZEFIRO SERIES IP54 IP55

MODEL MVQ026 (air flow 26m³/h) IP54







Grille with filter

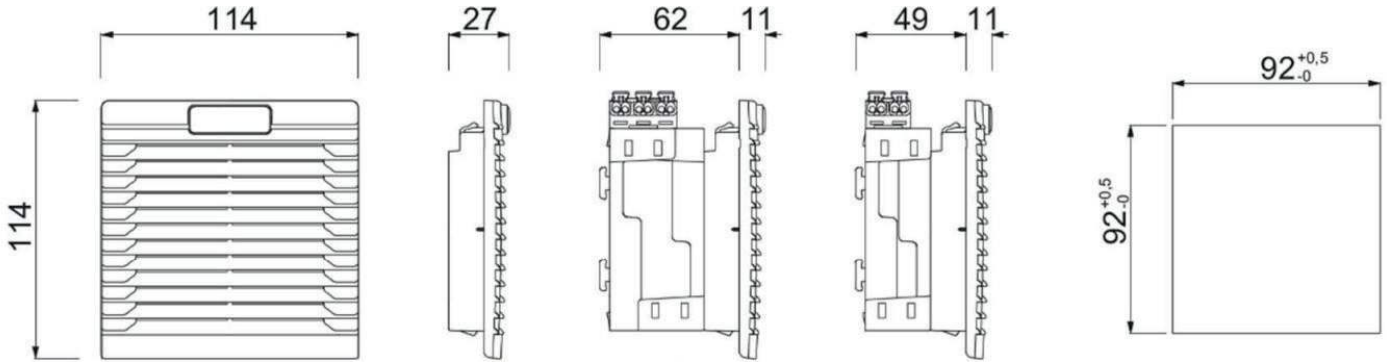

MVQ026AS | MVQ026BS MVQ026DS | MVQ026ES

REFERENCE - FILTER FAN MVQ026									
REFERENCE	AIR FLOW RATE	POWER SUPPLY	POWER CONSUMPTION	CURRENT CONSUMPTION	OVERCURRENT PROTECCTION	ELECTRIC CONNECTION	NOISE	FILTER MAT (EUROVENT)	MACHINING MOUNTING
MVQ026AS	26m³/h	230V/50-60Hz	13W	0,10A	Impedance	3-pole terminal	30dB	EU2	92x92 +0,5 0
MVQ026BS		115V/50-60Hz		0,14A					
MVQ026DS		12VCD	3W	0,25A		2-pole terminal	35dB		
MVQ026ES		24VCD	4W	0,16A					
Option UL approval	Add "UL" to the reference. Ex. "MVQ026ASUL"								
Version EMC	Add "M" to the reference. Ex. "MVQ026ASM"								
Stainless steel trim	Add "X" to the reference. Ex. "MVQ026ASX"								
Versión IP55 (case)	Add to the reference MVQ026CUBX (AISI 304) or MVQ026CUBX6 (AISI 316)								
Dual function fan, extraction in standard mode.									

GRILL WITH FILTER

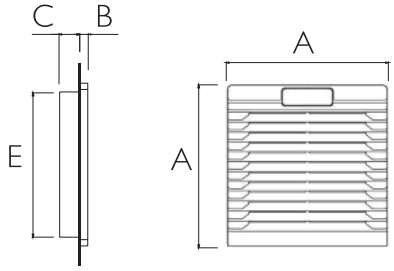

REFERENCE	DIMENSIONS (mm)				
REFERENCE	MACHINING MOUNTING	A	B	C	E
MVQR026	92x92 +0,5 0	114	4	16	90
Version Norms UL	Add "UL" to the reference				
Version EMC	Add "M" to the reference				
Stainless stee trim	Add "X" to the reference				

FILTER FANS ZEFIRO SERIES IP54 IP55

MODEL MVQ058 (air flow 58m³/h) IP54







Grille with filter

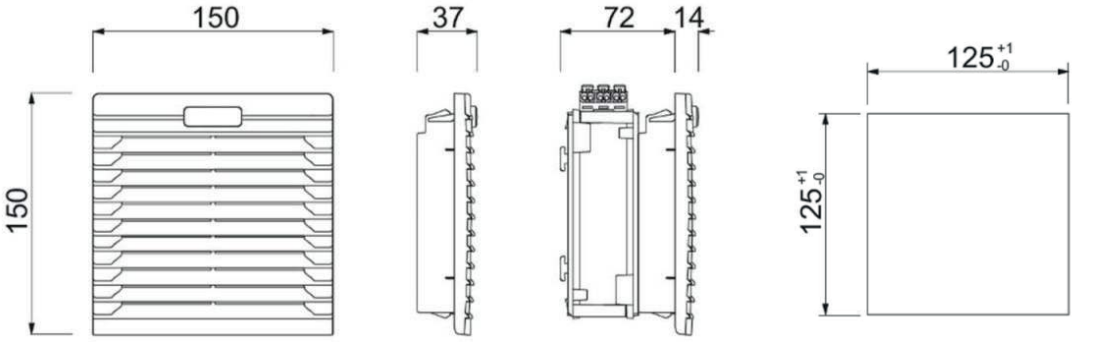

REFERENCE - FILTER FAN MVQ058									
REFERENCE	AIR FLOW RATE	POWER SUPPLY	POWER CONSUMPTION	CURRENT CONSUMPTION	OVERCURRENT PROTECCTION	ELECTRIC CONNECTION	NOISE	FILTER MAT (EUROVENT)	MACHINING MOUNTING
MVQ058AS	58m³/h	230V/50-60Hz	22W	0,14A	Impedance	3-pole terminal	43dB	EU3	125x125 +1 -1
MVQ058BS		115V/50-60Hz		0,26A					
MVQ058ES		24VCD	9W	0,37A		2-pole terminal	45dB		
MVQ058FS		48VCD	13W	0,27A					
Option UL approval	Add "UL" to the reference. Ex."MVQ058ASUL"								
Version EMC	Add "M" to the reference. Ex."MVQ058ASM"								
Stainless steel trim	Add "X" to the reference. Ex."MVQ058ASX"								
Versión IP55 (case)	Add to the reference MVQ058CUBX (AISI 304) or MVQ058CUBX6 (AISI 316)								
Dual function fan, extraction in standard mode.									

GRILL WITH FILTER

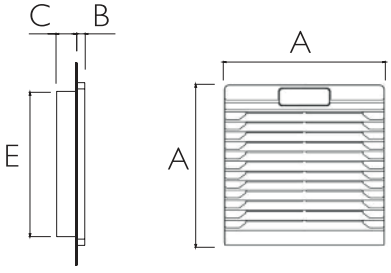

REFERENCE	DIMENSIONS (mm)				
REFERENCE	MACHINING MOUNTING	A	B	C	E
MVQR058	125x125 +1 -1	150	14	23	124
Version Norms UL	Add "UL" to the reference				
Version EMC	Add "M" to the reference				
Stainless steel trim	Add "X" to the reference				

FILTER FANS ZEFIRO SERIES IP54 IP55

MODEL MVQ115 (air flow 115m³/h) IP54







Grille with filter

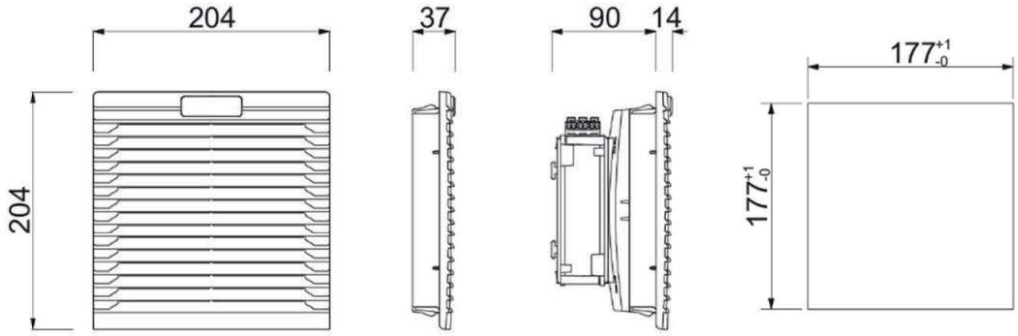

REFERENCE - FILTER FAN MVQ115									
REFERENCE	AIR FLOW RATE	POWER SUPPLY	POWER CONSUMPTION	CURRENT CONSUMPTION	OVERCURRENT PROTECCTION	ELECTRIC CONNECTION	NOISE	FILTER MAT (EUROVENT)	MACHINING MOUNTING
MVQ115AS	115m³/h	230V/50-60Hz	22W	0,14A	Impedance	3-pole temrinal	43dB	EU3	177x177 +1 0
MVQ115BS		115V/50-60Hz		0,26A					
MVQ115ES		24VCD	9W	0,37A		2-pole terminal	45dB		
MVQ115FS		48VCD	13W	0,27A					
Option UL approval	Add "UL" to the reference. Ex."MVQ115ASUL"								
Version EMC	Add "M" to the reference. Ex."MVQ115ASM"								
Stainless steel trim	Add "X" to the reference. Ex."MVQ115ASX"								
Versión IP55 (case)	Add to the reference MVQ115CUBX (AISI 304) or MVQ115CUBX6 (AISI 316)								
Dual function fan, extraction in standard mode.									

GRILL WITH FILTER

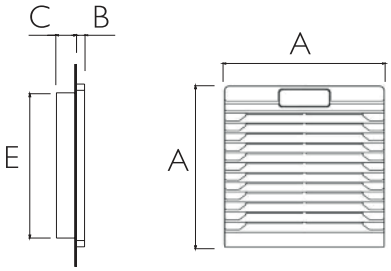

REFERENCE	DIMENSIONS (mm)				
REFERENCE	MACHINING MOUNTING	A	B	C	E
MVQR115	177x177 +1 0	204	14	23	174
Version Norms UL	Add "UL" to the reference				
Version EMC	Add "M" to the reference				
Stainless steel trim	Add "X" to the reference				

Phone +34 945 601 381
comercial@delvalle.es | www.delvallebox.com

FILTER FANS ZEFIRO SERIES IP54 IP55

MODEL MVQ255 | MVQ410 (air flow 255m³/h | 410m³/h) IP54







Grille with filter

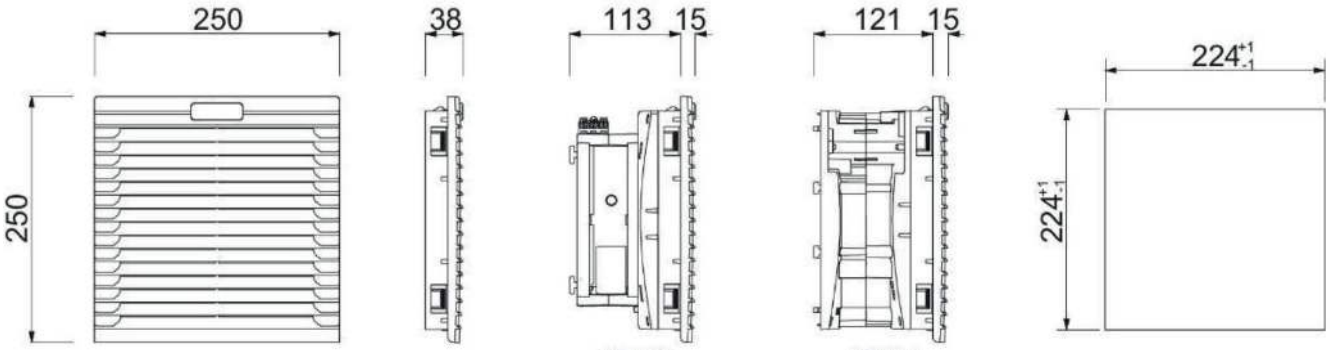

MVQ225 MVQ410

REFERENCE - FILTER FAN MVQ255 | MVQ410									
REFERENCE	AIR FLOW RATE	POWER SUPPLY	POWER CONSUMPTION	CURRENT CONSUMPTION	OVERCURRENT PROTECCTION	ELECTRIC CONNECTION	NOISE	FILTER MAT (EUROVENT)	MACHINING MOUNTING
MVQ225AS	255m³/h	230V/50-60Hz	40W	0,17A	Thermal	3-pole terminal	53dB	EU3	224x224 +1 -1
MVQ225BS		115V/50-60Hz		0,34A					
MVQ225ES		24VCD	26W	1,08A	Impedance	2-pole terminal	61dB		
MVQ225FS		48VCD	33W	0,68A					
MVQ410AS	410m³/h	230V/50-60Hz	70W	0,40A	Thermal	3-pole terminal	65dB		
MVQ410BS		115V/50-60Hz		0,80A					
MVQ410CS		400V/50-60Hz	60W	0,18A		4-pole terminal			
Option UL approval	Add "UL" to the reference. Ex."MVQ255ASUL"								
Version EMC	Add "M" to the reference. Ex."MVQ255ASM"								
Stainless steel trim	Add "X" to the reference. Ex."MVQ255ASX"								
Versión IP55 (case)	Add to the reference MVQ255CUBX (AISI 304) or MVQ255CUBX6 (AISI 316)								
Dual function fan, extraction in standard mode.									

GRILL WITH FILTER

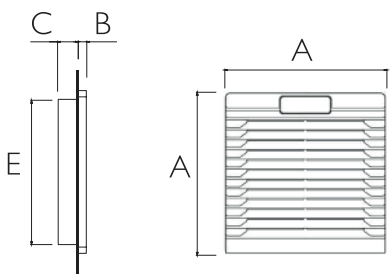

REFERENCE	DIMENSIONS (mm)				
REFERENCE	MACHINING MOUNTING	A	B	C	E
MVQR255	224x224 +1 -0	250	15	23	220
Version Norms UL	Add "UL" to the reference				
Version EMC	Add "M" to the reference				
Stainless steel trim	Add "X" to the reference				

Phone +34 945 601 381
comercial@delvalle.es | www.delvallebox.com

FILTER FANS ZEFIRO SERIES IP54 IP55

MODEL MVQ550 | MVQ700 (air flow 550m³/h | 700m³/h) IP54







Grille with filter

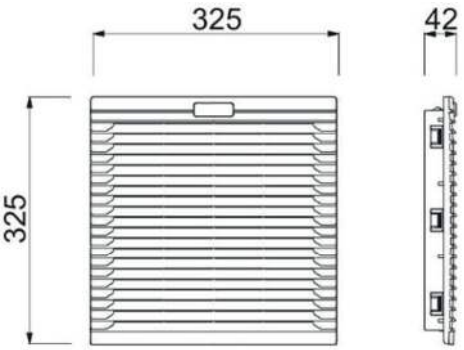

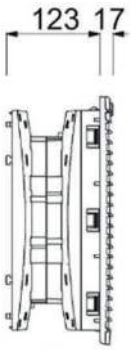

MVP500

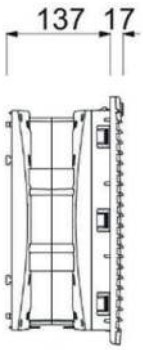

MVP630

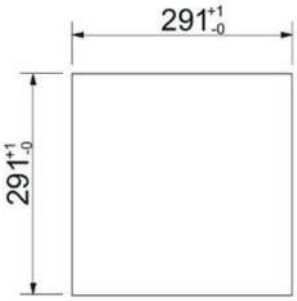

REFERENCE - FILTER FAN MVQ550 | MVQ700									
REFERENCE	AIR FLOW RATE	POWER SUPPLY	POWER CONSUMPTION	CURRENT CONSUMPTION	OVERCURRENT PROTECCTION	ELECTRIC CONNECTION	NOISE	FILTER MAT (EUROVENT)	MACHINING MOUNTING
MVQ550AS	550m³/h	230V/50-60Hz	70W	0,40A	Thermal	3-pole terminal	65dB	EU3	291x291 +1 0
MVQ550BS		115V/50-60Hz		0,80A					
MVQ550CS		400V/50-60Hz	60W	0,18A		4-pole terminal			
MVQ700AS	700m³/h	230V/50-60Hz	130W	0,55A		3-pole terminal	72dB		
MVQ700BS		115V/50-60Hz		1,10A					
Option UL approval		Add "UL" to the reference. Ex."MVQ550ASUL"							
Version EMC		Add "M" to the reference. Ex."MVQ550ASM"							
Stainless steel trim		Add "X" to the reference. Ex."MVQ550ASX"							
Versión IP55 (case)		Add to the reference MVQ550CUBX (AISI 304) or MVQ550CUBX6 (AISI 316)							
Dual function fan, extraction in standard mode.									

GRILL WITH FILTER

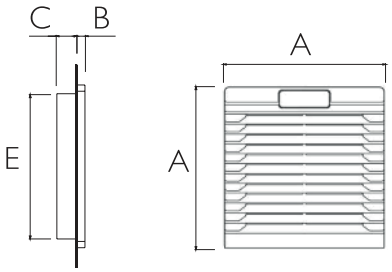

REFERENCE	DIMENSIONS (mm)				
REFERENCE	MACHINING MOUNTING	A	B	C	E
MVQR550	291x291 -1 0	325	17	25	290
Version Norms UL	Add "UL" to the reference				
Version EMC	Add "M" to the reference				
Stainless steel trim	Add "X" to the reference				

FILTER FANS ZEFIRO SERIES IP54 IP55

ACCESSORIES

STAINLESS STEEL TRIM

The stainless steel trim is ultra-flat and features a quick "click" mounting system, with an IP54 protection rating and axial bearing. Made of ABS, it has a stainless steel housing with a functional and innovative design.

Ideal for installation in our stainless steel cabinets and other outdoor enclosures. All models can be requested in stainless steel; simply add the letter "X" to the reference.



REFERENCE	DIMENSIONS (mm)		
REFERENCE	A	B	C
MVPR026EMBX	116	116	6
MVPR058EMBX	157	156	12
MVPR115EMBX	206	205	11
MVPR255EMBX	251	254	11
MVPR550EMBX	327	327	7.5
316L Stainless steel version	Add '6' to the reference		



Examples with IP55 Housing

STAINLESS STEEL HOUSING

Our IP55 housing for fans is the ideal accessory to enhance the protection of your electrical cabinets. It provides an effective barrier against dust and water splashes, keeping internal components safe in demanding industrial environments.

With its robust design and easy installation, this housing extends the lifespan of the fan and equipment, ensuring optimal and long-lasting performance, even in challenging conditions.

REFERENCE	DIMENSIONS (mm)		
REFERENCE	A	B	C
MVP026CUB	181	175	70
MVP058CUB	226	220	70
MVP115CUB	280	274	70
MVP255CUB	326	320	70
MVP550CUB	396	390	70
316L Stainless steel version	Add '6' to the reference		
Galvanised version	Remove 'X' from the reference		

FILTER FANS ZEFIRO SERIES IP54 IP55

ACCESSORIES

FILTERS (ACCESSORY)

We offer standard filters for the fans, available in packs of 10 units. To ensure optimal performance, it is important to regularly check the condition of the filter and replace it as necessary. These filters are made with self-extinguishing synthetic fibers and feature progressive filtration capacity.

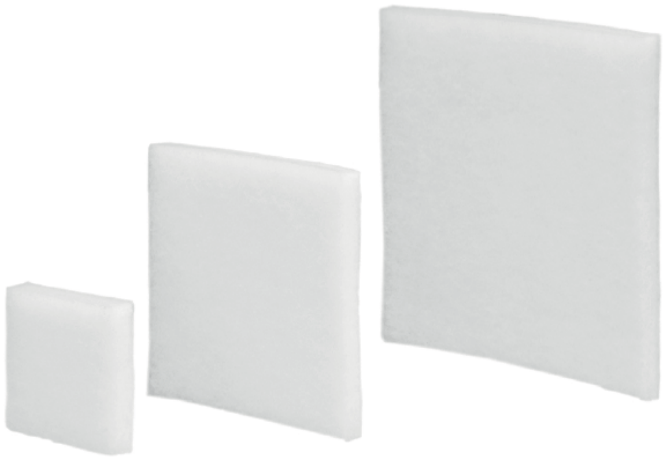

REERENCE	FAN
MVQF026	MVQ026
MVQF058	MVQ058
MVQF115	MVQ115
MVQF255	MVQ255
MVQF550	MVQ550



FOR MORE INFORMATION CLICK HERE

OTHER VENTILATION AND AIR CONDITIONING PRODUCTS

AT DELVALLE, WE ARE EXPERTS IN CLIMATE CONTROL AND VENTILATION – A SOLUTION FOR EVERY NEED

Our team of engineers will provide expert advice on the best climate control installation tailored to your specific needs, ensuring improved efficiency and greater energy and cost savings.



AIR CONDITIONERS



THERMOELECTRIC COOLING



FANS WITH FILTER

REGULATION TEMPERATURE





HEATING RESISTORS

Phone +34 945 601 381
comercial@delvalle.es | www.delvallebox.com

delvalle®

FOR MORE INFORMATION CLICK HERE

DELVALLE CUSTOMISED SOLUTIONS

For half a century, we have been progressing with dynamism, committed to offering tailored solutions in electrical enclosures and climate control systems.
Our goal is to provide value through expert consultancy and high-quality products, both nationally and internationally, supported by major global companies.
With certifications that meet the highest international standards, we guarantee a swift service, with deliveries in as little as 3 weeks.
Additionally, our flexibility in formats and dimensions positions us as the manufacturer with the most certifications worldwide.



STAINLESS STEEL ENCLOSURES AND CABINETS



WEATHERPROOF OUTDOOR ENCLOSURES



GALVANISED CABINETS AND BOXES



ELECTRICAL SOLUTIONS FOR URBAN AREAS



HYGIENIC BOXES WITH SLOPING ROOF



ATEX ENCLOSURES AND CABINETS

ELECTRICAL ENCLOSURES IP66, IP67, IP68 Y IP69K

Do you need electrical enclosures with protection ratings from IP55, IP66, IP69K, and/or high levels of waterproofing like IP67 or IP68 for your project? We have the specific solution you need. As leaders in custom design for over 45 years, we specialize in creating highly sealed enclosures and waterproof electrical cabinets certified to the international sealing standard EN 60529:2018. Our solutions ensure the success of your project in any location and weather conditions, suitable for both indoor and outdoor use.

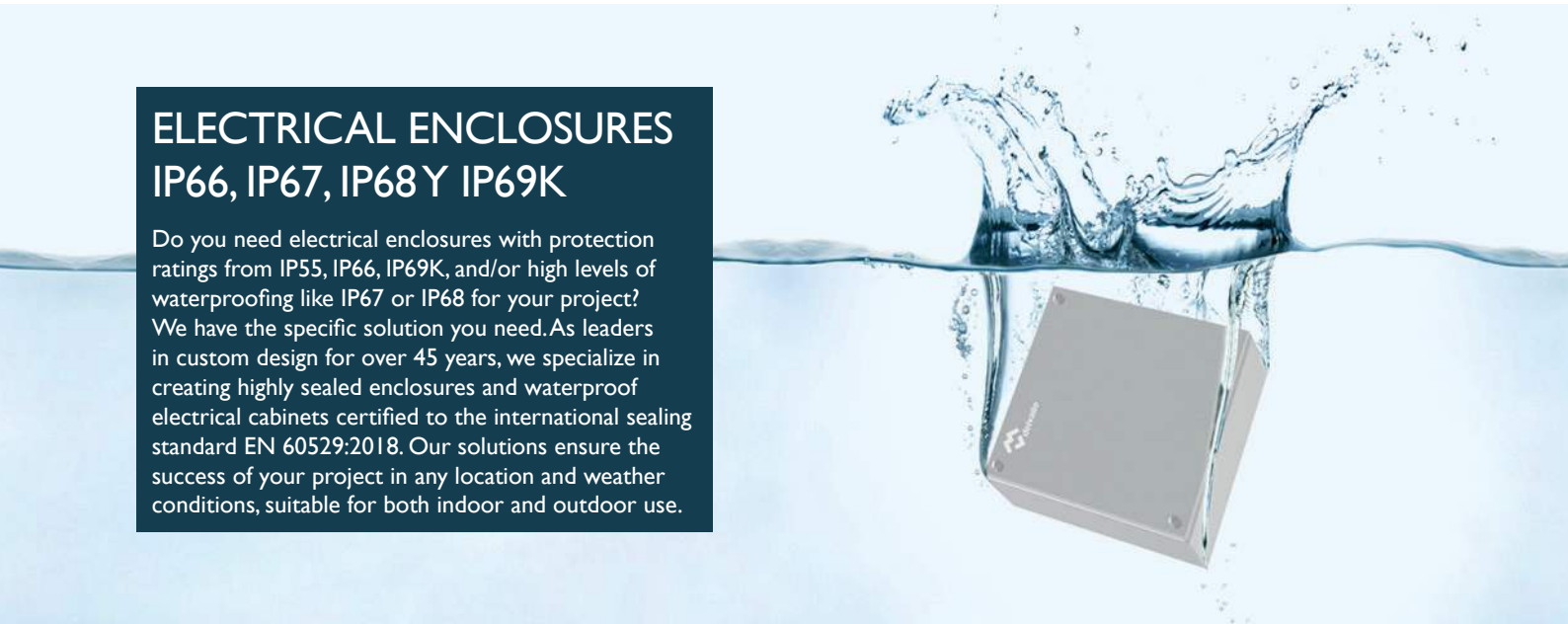

delvalle®

INDUSTRIAL ENCLOSURE SOLUTIONS





Paso del Prao, 6. 01320 Oyón (Álava). Spain
P. +34 945 601 381
comercial@delvalle.es | www.delvallebox.com

Contact us, we will be available at any time

CE TÜV Rheinland UL CERTIFIED SAFETY US-CA E342220 greenproduct RoHS WEEE