delvalle®

INDUSTRIAL ENCLOSURE SOLUTIONS

comercial@delvalle.es | www.delvallebox.com

PRE-INSTALLED JUNCTION BOX

Certified boxes – just ready to install

Anti-corrosion



10 YEARS

STAINLESS ANTICORROSIVE **GUARANTEE**

5 YEARS

MECHANICAL PARTS **GUARANTEE**



WE PUT AT YOUR DISPOSAL

We offer over **45 years** providing solutions to demanding customers who require very specific characteristics and behaviour according to the sector and their needs.

WHEREVER YOU GO

We are committed to working closely with our customers, providing them with **exceptional service** and offering an advanced and extensive range of products with very competitive prices.

HIGH STANDARD OF QUALITY AND SERVICES

We only use materials provided by companies who offer the very **highest quality**, suitable and certified products. Our success is due to top quality assurance: ISO 9001, SGS, UL, TÜV, ISO 14000 and Ohsas 18001.

CUSTOMIZE TOTALLY YOUR ENCLOSURE

Our production systems can give custom-made solutions **on demand.** Every colour from RAL chart is available to be personalized. A variety of protection standards thanks to our own painting facilities.

CONTACT US

Confidentiality, reliability & quality

www.delvallebox.com
comercial@delvalle.es
+34 945 601 381

ALSO ONLINE

Please contact our technical sales department

A team of professionals with high experience and ability to solve all your queries



STOCK STAINLESS STEEL JUNCTION BOX

Certified and ready for installation

Anti-corrosion



Examples

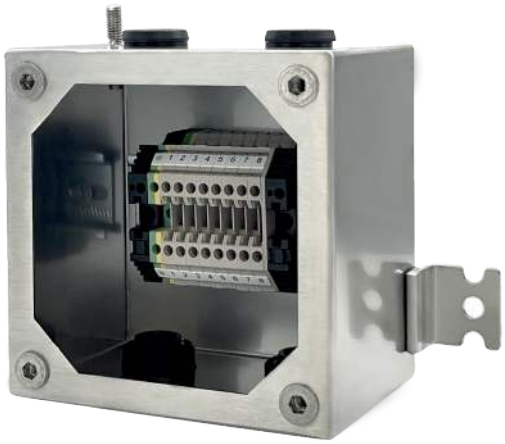

STOCK

The junction boxes terminals are pre-assembled with terminals and cable glands; standardized, certified and ready for installation.

Its characteristic design makes it, a sturdy, anti-corrosion, IP66 waterproof with preassembled terminals and four stopping plug M20.

We deliver the terminal box with terminals installed on numbered DIN rail, with their glands mounted (material to be chosen) and final certified, ready for placement and in stock for delivery so you do not have to worry about anything.

FOR MORE INFORMATION CLICK HERE



STAINLESS STEEL JUNCTION BOX

STOCK

TECHNICAL CHARACTERISTICS

Pre-assembled boxes made of stainless steel AISI 304L, robust and anticorrosive, represent our most solvent bet due to its functionality, design and sealing to incorporate all types of terminals.

Incorporated in the inside 8, 15 or 20 screw terminals (2,5 mm^2) mounted on DIN rail.

Certified CE.

Installed terminals from Weidmüller brand.

Access to the inside is facilitated thanks to the fastening of the cover with easy-to-install screws.

Subject to the stringent tests prescribed in IEC 60079-7 in the premises of a Notified Body.

External grounding of metric M6.

Thickness 1.2mm (depending on boxes).

ADVANTAGES

- In stock, delivery time next day.
- Save time and cost savings.
- The access to the interior is facilitated thanks to the fixing of the cover with screws of easy placement.
- Marine water resistant (AISI 316L).
- Strength, durability and long life.
- The manufacture of the stainless steel monobloc allows sealing and ensures maximum resistance.

NORMATIVE

- IP55 or IP66 (W) Norm EN 62208 / EN 60529.
- DIN EN ISO 14159 Machine safety – hygiene requirements pertaining to the design of machinery.
- Machinery Directive 2006/42/EC. Food machinery and cosmetic or pharmaceutic production.
- EHEDG Guideline Hygienic Design doc.13 machinery for open processes.
- DIN EN 1672-2-2005 for food industry machinery.
- Maximum IK10 resistance Norm IEC 62208 and EN 50102.
- Manufactured following EU low voltage ruling 2014/35/UE.
- RoHS Directive 2011/65/UE compliant.
- UL approval Nema 4x, 12, 3r, 1. N° File E342220.
- Maximum voltage 1000 V.
- Temperature resistant: -40°C +100°C (short time +160°C).
- Option silicone gasket: from -60°C to +180°C (short time up to +350°C)



STOCK

Deliveries Next Day

STAINLESS STEEL JUNCTION BOX

STOCK

GEO SERIE IP66

CLICK HERE TO DOWNLOAD
THE FILES CAD - PLANS - CERTIFICATES



Examples

DRAWINGS

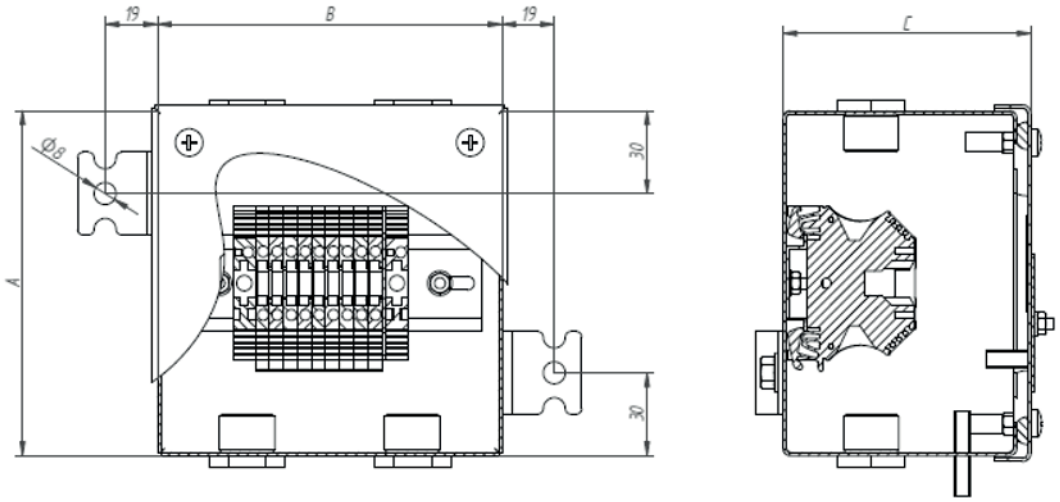

10 YEARS
STAINLESS ANTICORROSIVE **GUARANTEE**

5 YEARS
MECHANICAL PARTS **GUARANTEE**

REFERENCES

REFERENCES	DIMENSIONS (mm)					HOLES	
JUNCTION BOX OF STAINLESS STEEL	MEASURES (mm)			N° OF TERMINALS		STOPPING PLUG	
	HEIGHT - A -	WIDTH - B -	DEPTH - C -	TERMINALS	GROUND TERMINALS	AMOUNT	METRICS
MVCB121290002	125	125	90	8	1	4	M20

Telf. +34 945 601 381
comercial@delvalle.es | www.delvallebox.com

PRE-INSTALLED JUNCTION BOX IN STAINLESS STEEL

GEO SERIE IP66

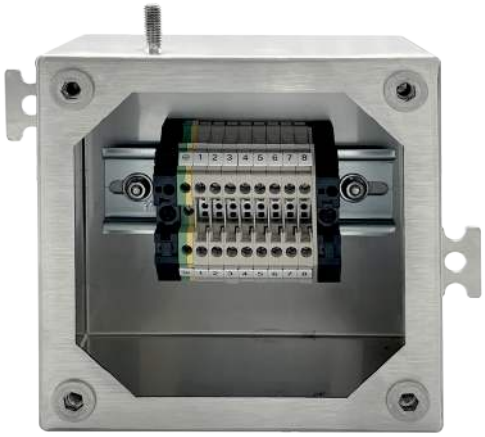

Examples



Just ready to install

The junction boxes are pre-assembled with terminals and cable glands; standardized, certified and ready for installation.
Its characteristic design makes it, a sturdy, anti-corrosion, IP66 waterproof with preassembled terminals and cable glands or plugs to choose from in stainless steel, nickel plated brass or plastic.

We deliver the terminal box with terminals installed on numbered DIN rail, with their glands mounted (material to be chosen) and final certified, ready for placement and in stock for delivery so you do not have to worry about anything

FOR MORE INFORMATION CLICK HERE



PRE-INSTALLED JUNCTION BOX IN STAINLESS STEEL
GEO SERIE IP66

TECHNICAL CHARACTERISTICS

Pre-assembled boxes made of stainless steel AISI 304L, robust and anticorrosive, represent our most solvent bet due to its functionality, design and sealing to incorporate all types of terminals.

Incorporated in the inside 8, 15 or 20 screw terminals (2,5 mm²) mounted on DIN rail.

Certified CE.

Installed terminals from Weidmüller brand.

Access to the inside is facilitated thanks to the fastening of the cover with easy-to-install screws.

Subject to the stringent tests prescribed in IEC 60079-7 in the premises of a Notified Body.

External grounding of metric M6.

Thickness 1.2mm (depending on boxes).

ADVANTAGES

- Unbeatable delivery time.
- Save time and cost savings.
- The access to the interior is facilitated thanks to the fixing of the cover with screws of easy placement.
- Marine water resistant (AISI 316L).
- Strength, durability and long life.
- The manufacture of the stainless steel monobloc allows sealing and ensures maximum resistance.

NORMATIVE

- IP55 or IP66 (W) Norm EN 62208 / EN 60529.
- DIN EN ISO 14159 Machine safety – hygiene requirements pertaining to the design of machinery.
- Machinery Directive 2006/42/EC. Food machinery and cosmetic or pharmaceutic production.
- EHEDG Guideline Hygienic Design doc.13 machinery for open processes.
- DIN EN 1672-2-2005 for food industry machinery.
- Maximum IK10 resistance Norm IEC 62208 and EN 50102.
- Manufactured following EU low voltage ruling 2014/35/UE.
- RoHS Directive 2011/65/UE compliant.
- UL approval Nema 4x, 12, 3r; 1. N° File E342220.
- Maximum voltage 1000 V.
- Temperature resistant: -40°C +100°C (short time +160°C).
- Option silicone gasket: from -60°C to +180°C (short time up to +350°C)

OPTIONS

- Possibility to choose the material of stuffing box: stainless steel, brass, polyester, etc. As well as the type of cable: armed or unarmed or plugs.
- Options of 8, 15, 20 terminals.

PRE-INSTALLED JUNCTION BOX IN STAINLESS STEEL

GEO SERIE IP66

CLICK HERE TO DOWNLOAD
THE FILES CAD - PLANS - CERTIFICATES

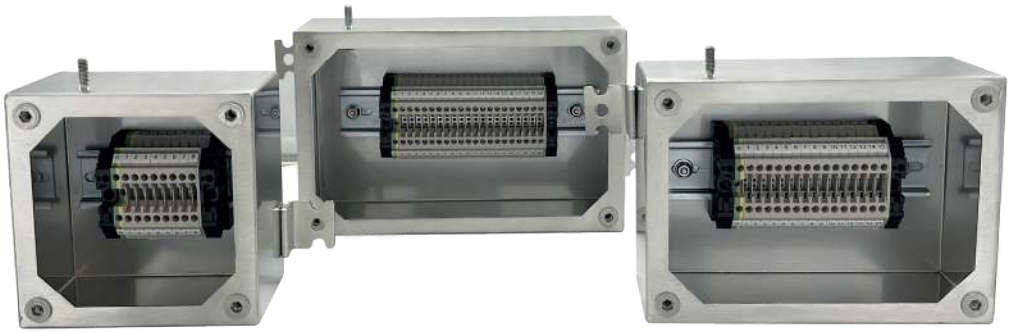

Examples

DRAWING

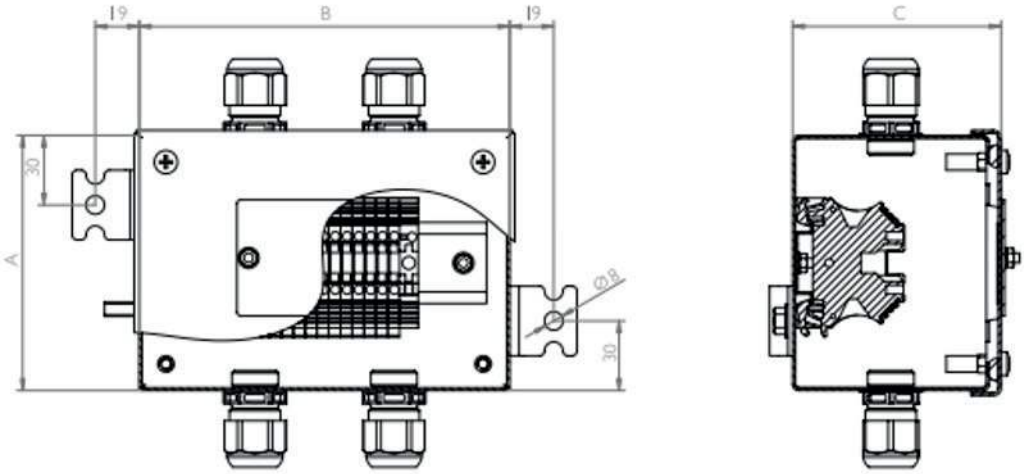

10 YEARS
STAINLESS ANTICORROSIVE **GUARANTEE**

5 YEARS
MECHANICAL PARTS **GUARANTEE**

REFERENCES

REFERENCES	DIMENSIONS (mm)				
JUNCTION BOXES STAINLESS STEEL	MEASURES (mm)			MEASURES (mm)	
	HEIGHT - A -	WIDTH - B -	DEPTH - C -	TERMINALS	GROUND TERMINALS
MVCB121290001	125	125	90	8	1
MVCB131890001	180	130	90	15	1
MVCB142290.001	220	140	90	20	1

Telf. +34 945 601 381
comercial@delvalle.es | www.delvallebox.com

DELVALLE OFFERS
CUSTOMIZED SOLUTIONS

FOR MORE INFORMATION CLICK HERE

Consult us without obligation

Confidentiality, reliability & quality

www.delvallebox.com
comercial@delvalle.es
+34 945 601 381

ALSO ONLINE

STAINLESS STEEL INDUSTRIAL ENCLOSURES



OUTDOOR HEAVY DUTY ELECTRICAL ENCLOSURES

OUTDOOR TELECOM 19 RACKS & CABINETS



GALVANIZED STEEL ELECTRICAL ENCLOSURES

HYGIENIC DESIGN ENCLOSURES



ALUMINIUM ELECTRICAL ENCLOSURES

DELVALLE OFFERS
CUSTOMIZED SOLUTIONS

FOR MORE INFORMATION CLICK HERE

Consult us without obligation

Confidentiality, reliability & quality

www.delvallebox.com
comercial@delvalle.es
+34 945 601 381

ALSO ONLINE

WATERPROOF SHEET STEEL ELECTRICAL ENCLOSURES



CLIMATE CONTROL COOLING FOR ELECTRICAL ENCLOSURES

NEMA ELECTRICAL ENCLOSURES TYPE 1-3R-4X-12



MODULAR DISTRIBUTION ENCLOSURES

EMC ELECTRICAL ENCLOSURES SOLUTIONS



CABLE GLANDS & ENTRY SEALS FOR CABINETS

delvalle®

INDUSTRIAL ENCLOSURE SOLUTIONS





Paso del Prao, 6. 01320 Oyón (Álava). Spain
T. +34 945 601 381
comercial@delvalle.es | www.delvallebox.com

Contact us, we will be available at any time

CE TÜV Rheinland UL CERTIFIED SAFETY US-CA E342220 greenproduct RoHS WEEE