·WE ARE·
MANUFACTURERS
CERTIFIED

delvalle®
INDUSTRIAL ENCLOSURE SOLUTIONS

SOLUTIONS DELVALLE

CLIMATE CONTROL COOLING FOR ELECTRICAL ENCLOSURES





ECO FRIENDLY PRODUCT

comercial@delvalle.es | www.delvallebox.com

FILTER FANS PRIUS SERIES IP54-55	4
AIR COOLING UNITS (INDOOR) CLIMA SERIES IP54	6
AIR COOLING UNITS (OUTDOOR) TROPIC SERIES IP54	8
STAINLESS STEEL THERMOELECTRIC COOLER COOLING + HEATING IP67	11
PELTIER COOLING FLAT DESIGN IP55	13
ROOF MOUNTED AIR CONDITIONERS IP54	14
ROOF FAN VIPER SERIES IP44-54	15
DEHUMIDIFIER ELECTRICAL ENCLOSURE	16
TEMPERATURE AND HUMIDITY SMART SENSOR	17
UL RESISTANCE HEATERS MAX SERIES	18
ALUMINIUM RESISTANCE HEATER	20
THERMOSTATS AND THERMO-HYGROSTATS	21
VENT DRAINS FOR THERMOELECTRIC COOLERS	22
VENTILATION PLUGS IP68	24

Paso del Prao, 6. 01320 Oyón (Álava). Spain
Phone +34 945 601 381
comercial@delvalle.es | **www.delvallebox.com**



WE PUT AT YOUR DISPOSAL

We offer over **50 years** providing solutions to demanding customers who require very specific characteristics and behaviour according to the sector and their needs.

WHEREVER YOU GO

We are committed to working closely with our customers, providing them with **exceptional service** and offering an advanced and extensive range of products with very competitive prices.

HIGH STANDARD OF QUALITY AND SERVICES

We only use materials provided by companies who offer the very **highest quality**, suitable and certified products. Our success is due to top quality assurance: ISO 9001, SGS, UL, TÜV, ISO 14000 and ISO45001.

CUSTOMIZE TOTALLY YOUR ENCLOSURE

Our production systems can give custom-made solutions **on demand.** Every colour from RAL chart is available to be personalized. A variety of protection standards thanks to our own painting facilities.

EU

100%
Diseñado y fabricado íntegramente en España
Entirely designed and manufactures in Spain

CONTACT US

Confidentiality, reliability & quality

www.delvallebox.com
comercial@delvalle.es
+34 945 601 381

ALSO ONLINE

Please contact our technical sales department

A team of professionals with high experience and ability to solve all your queries



FILTER FANS PRIUS SERIES IP54 IP55



Example



Example with casing

Maximum Reliable and Efficient

Built-in filter fan high performance, low power, and soundless, with slim design, only 4 mm and affordable price.
These fans are ideal for the removal of large heat loads inside the cabinets in an economical and easy way.
Its compact design, easy mounting and disassembly for quick cleaning make it ideal for use in any heat dissipation inside the enclosure. Quick assembly thanks to the mounting fast "Clip-on" with self-adhesive gasket.
Specially designed for use in installations that need a high level of protection IP54 / IP55.

FOR MORE INFORMATION CLICK HERE

FEATURES

- Life time +50.000 hours in 40°C.
- ECOfriendly: low consumption, high efficiency and very silent.
- Mounting fast "Clip-on".
- Self-adhesive gasket.
- Air flow direction"inside-out".
- Ball bearing.
- Panels with thickness in range 1.2 - 2.4 mm.
- Operating temperature -10 /+70°C.
- Duty cycle 100%.
- The fan is supplied with filter designed with easy cleaning and high resistance.
- Also in stainless steel version, with casing.

OPTIONS

- We recommend install our thermostats (*).
- EMC Electromagnetic Compatible Version.
- Flow direction "outside-in".
- UL approved (Underwriters Laboratories) File N° E301228.
- RAL 7032 (grey) and RAL 9005 (black).
- IP55 stainless steel version with case.

NORMATIVE

- IP54/Class I Norm IEC 60529.
- Built directive 2014/35/UE low voltage.
- Operating temperature -10°C +70°C.
- Filter mat (Eurovent) EU2 and EU3 (depending on model)
- Material ABS UL94V-O RAL 7035.
- Life time +50.000 hours at 40°C.

FILTER FANS PRIUS SERIES IP54 IP55

PLAN AND REFERENCES FAN

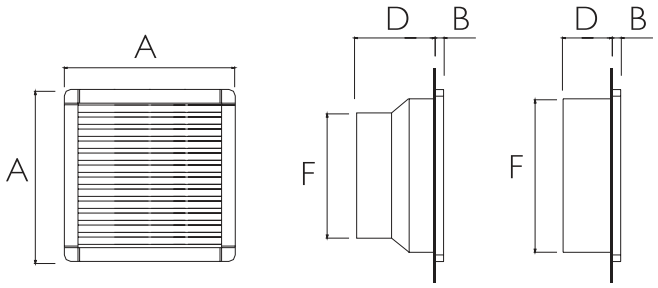



Examples stainless steel version

FILTER FANS PRIUS SERIES IP54-55														
REFERENCES	AIR FLOW	POWER SUPPLY	POWER	CONSUMTION	CURRENT CONSUMPTION	ELECTRIC CONNECTION	NOISE	FILTER MAT (EUROVENT)	MACHINING MOUNTING	A	B	C	D	F
MVP024AS	24m³/h	230V/50-60Hz	13W	0,10A	Impedance	faston 2,8x0,5mm	30dB	EU2	92x92 $^{+0,5}_{0}$	114	4	12	53	90
MVP024BS		115V/50-60Hz		0,14A										
MVP024DS		12VCD	3W	0,25A		2-pole terminal 1,5mm²	35dB						41	
MVP024ES		24VCD	4W	0,16A										
MVP055AS	55m³/h	230V/50-60Hz	22W	0,14A	Impedance	faston 2,8x0,5mm	43dB	EU3	125x125 $^{+1}_{-1}$	150	5,5	22	71	124
MVP055BS		115V/50-60Hz		0,26A										
MVP055ES		24VCD	9W	0,37A		2-pole terminal 1,5mm²	45dB							
MVP055FS		48VCD	13W	0,27A										
MVP120AS	120m³/h	230V/50-60Hz	22W	0,14A	Impedance	faston 2,8x0,5mm	43dB	EU3	177x177 $^{+1}_{0}$	204	5,5	23	92	121
MVP120BS		115V/50-60Hz		0,26A										
MVP120ES		24VCD	9W	0,37A		2-pole terminal 1,5mm²	45dB							
MVP120FS		48VCD	13W	0,27A										
MVP230AS	230m³/h	230V/50-60Hz	40W	0,17A	Thermal	3-pole terminal 2,5mm²	53dB	EU3	224x224 $^{+1}_{-1}$	250	5,5	24	113	174
MVP230BS		115V/50-60Hz		0,34A										
MVP230ES		24VCD	26W	1,08A	Impedance		61dB							
MVP230FS		48VCD	33W	0,68A										
MVP370AS	370m³/h	230V/50-60Hz	70W	0,40A	Thermal	4-pole terminal 1,5mm²	65dB	EU3	224x224 $^{+1}_{-1}$	250	5,5	24	104	218
MVP370BS		115V/50-60Hz		0,80A										
MVP370CS		400V/50-60Hz	60W	0,18A										
MVP500AS	500m³/h	230V/50-60Hz	70W	0,40A	Thermal	3-pole terminal 2,5mm²	65dB	EU3	291x291 $^{+1}_{0}$	320	5,5	24	145	220
MVP500BS		115V/50-60Hz		0,80A										
MVP500CS		400V/50-60Hz	60W	0,18A										
MVP630AS	630m³/h	230V/50-60Hz	130W	0,55A	Thermal	4-pole terminal 1,5mm²	72dB	EU3	291x291 $^{+1}_{0}$	320	5,5	24	145	270
MVP630BS		115V/50-60Hz		1,10A										

Version flow direction "outdoor-in"	Delete "S" to the reference. Ex "MVP024A"
Version Normative UL	Add "UL" to the reference. Ex "MVP024ASUL"
Version EMC	Add "M" to the reference. Ex "MVP024ASM"
Stainless steel version	Add "X" to the reference. Ex "MVP024ASX"
Version IP55 (case)	Contact us for more information

PLAN AND REFERENCES FILTER GRILLES

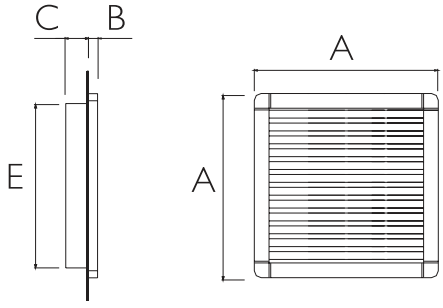

REFERENCES	MACHINING MOUNTING	A	B	C	E
MVPR024	92x92 $^{+0,5}_{0}$	114	4	12	90
MVPR055	125x125 $^{+1}_{-1}$	150	5,5	22	124
MVPR120	177x177 $^{+1}_{0}$	204	5,5	23	174
MVPR230	224x224 $^{+1}_{-0}$	250	5,5	24	220
MVPR500	291x291 $^{-1}_{0}$	320	5,5	24	290

Version Normative UL	Add "UL" to the reference
Version EMC	Add "M" to the reference
Stainless steel version	Add "X" to the reference

Available pack of 10 loose filters. Ask us for more information

AIR COOLING UNITS (INDOOR) **CLIMA SERIES** IP54

Quick Installation

Quick mounting, reliable, low maintenance and optimum design. Adaptable for any part of the enclosure: doors, back or laterals. Delvalle provides a wide range of reference based on the voltage, which ranges from 350 to 4000 W and the type of thermostat (manual or digital). By request we can supply up to 10000 W.
These units require almost no maintenance and are designed to prevent clogging by solid contaminants that might be found in the environment. Keep high efficiency even under adverse environmental conditions; this important advantage reduces drastically the maintenance of these units, making possible that the cooling unit can work without the filter in the external air grillage.
Most models have rotative compressors that enhance the performance of the refrigerator. Prompt installation thanks to the simplicity of the holes that can be drilled at the enclosure´s panel and to the fixing system. All elements included in the package. All are predisposed having an easy and safe electrical connection.
The internal air of the cabinet is sucked from the top, cooled within the cooling unit and returned inside the cabinet with a high flow rate. This ensures optimum cooling of the entire cabinet interior and counteracts any hot electronic components protected by the cooling unit.
Due to the special internal configuration that keeps the outside air flow separately of the indoor air-tight and due to the special airtight enclosure adhesive coupling. The Clima cooling units can keep the cabinet in a level of protection IP54.
The Clima cooling units are designed to minimize noise and to ensure a pleasant workplace. Also to protect the environment, all units are CFC´s free, thanks to the R134a refrigerants
The Clima cooling units are available for the main AC voltages.

Examples



FOR MORE INFORMATION CLICK HERE

AIR COOLING UNITS (INDOOR) CLIMA SERIES IP54

REFERENCES

REFERENCES	MVAIR0350A	MVAIR0350B	MVAIR0350C
COOLING CAPACITY	350 / 370 W		
POWER SUPPLY	230V / 50-60Hz / 1ph	115 V / 50-60Hz / 1ph	400 V / 50-60Hz / 2ph
MAX CURRENT	1,5 / 1,6 A	3 / 3,2 A	0,9 /1 A
DELAYED FUSE	4A	6A	4A
ABSORVED ELECTRIC POWER	290 / 320 W		
REFRIGERANT (type/charge)	R134a		
OPERATING °C (ambient)	+20 / +55°C		
OPERATING °C (enclosure)	+20 / +45°C		
NOISE LEVEL	60 dB(A)		
ELECTRICAL CONNECTION	3-pole connector		
DIMENSIONS (mm)	430 (high) x 280 (width) x 170 (depth)		
Stainless steel version	Add to the reference MVPCLIMA0350 (AISI 304L) or MVPCLIMA0350/16 (AISI 316L)		

REFERENCES	MVAIR0850A	MVAIR0850B	MVAIR0850C
COOLING CAPACITY	850 / 900 W		
POWER SUPPLY	230V / 50-60Hz / 1ph	115 V / 50-60Hz / 1ph	400 V / 50-60Hz / 2ph
MAX CURRENT	2,65 / 2,75 A	5,30 / 5,40 A	1,65 / 1,75 A
DELAYED FUSE	6A	10A	4A
ABSORVED ELECTRIC POWER	490 / 530 W		
REFRIGERANT (type/charge)	R134a		
OPERATING °C (ambient)	+20 / +55°C		
OPERATING °C (enclosure)	+20 / +45°C		
NOISE LEVEL	62 dB(A)		
ELECTRICAL CONNECTION	3-pole connector		
DIMENSIONS (mm)	635 (high) x 305 (width) x 210 (depth)		
Stainless steel version	Add to the reference MVPCLIMA0850 (AISI 304L) or MVPCLIMA0850/16 (AISI 316L)		

REFERENCES	MVAIR1450A	MVAIR1450B	MVAIR1450C
COOLING CAPACITY	1450 / 1500 W		
POWER SUPPLY	230V / 50-60Hz / 1ph	115 V / 50-60Hz / 1ph	400 V / 50-60Hz / 2ph
MAX CURRENT	3,70 / 4,2 A	7,4 / 8,4 A	1,35 / 2,1 A
DELAYED FUSE	6A	10A	4A
ABSORVED ELECTRIC POWER	600 / 630 W		
REFRIGERANT (type/charge)	R134a		
OPERATING °C (ambient)	+20 / +55°C		
OPERATING °C (enclosure)	+20 / +45°C		
NOISE LEVEL	65 dB(A)		
ELECTRICAL CONNECTION	3-pole connector		
DIMENSIONS (mm)	800 (high) x 400 (width) x 240 (depth)		
Stainless steel version	Add to the reference MVPCLIMA1450 (AISI 304L) or MVPCLIMA1450/16 (AISI 316L)		

REFERENCES	MVAIR2000A	MVAIR2000B	MVAIR2000C
COOLING CAPACITY	2000 / 2100 W		
POWER SUPPLY	230V / 50-60Hz / 1ph	115 V / 50-60Hz / 1ph	400 V / 50-60Hz / 2ph
MAX CURRENT	6,6 / 6,9 A	13 / 13,8 A	3,3 / 3,5 A
DELAYED FUSE	10A	16A	6A
ABSORVED ELECTRIC POWER	1060 / 1100 W		
REFRIGERANT (type/charge)	R134a		
OPERATING °C (ambient)	27 bar		
OPERATING °C (enclosure)	+20 / +55°C		
NOISE LEVEL	+20 / +45°C		
ELECTRICAL CONNECTION	70 dB(A)		
DIMENSIONS (mm)	3-pole connector		
Dimensiones (mm)	1000 (high) x 400 (width) x 240 (depth)		
Stainless steel version	Add to the reference MVPCLIMA2000 (AISI 304L) or MVPCLIMA2000/16 (AISI 316L)		

REFERENCES	MVAIR3000C		MVAIR4000C	
COOLING CAPACITY	2800 / 2950 W		3800 / 3980 W	
POWER SUPPLY	400V / 50Hz / 3ph	460V / 60Hz / 3ph	400V / 50Hz / 3ph	460V / 60Hz / 3ph
MAX CURRENT	2,2 A	2,2 A	2,7A	2,7A
DELAYED FUSE	11 A	11,8 A	14,5 A	15,1 A
ABSORVED ELECTRIC POWER	1550 / 1790 W		3800 / 3980 W	
REFRIGERANT (type/charge)	R134a		R134a	
OPERATING °C (ambient)	+20 / +55°C	+20 / +50°C	+20 / +55°C	+20 / +50°C
OPERATING °C (enclosure)	+20 / +45°C		+20 / +45°C	
NOISE LEVEL	70 dB(A)		70 dB(A)	
ELECTRICAL CONNECTION	3-pole connector		3-pole connector	
DIMENSIONS (mm)	1500 (high) x 400 (width) x 255 (depth)		1500 (high) x 400 (width) x 255 (depth)	
Stainless steel version	Add to the reference MVPCLIMA3000(AISI 304L) or MVPCLIMA3000/16 (AISI 316L)		Add to the reference MVPCLIMA4000(AISI 304L) or MVPCLIMA4000/16 (AISI 316L)	

AIR COOLING UNITS (OUTDOOR) TROPIC SERIES IP54

Optimal Cooling



Examples



FOR MORE INFORMATION CLICK HERE

The high temperatures and heat to which our outdoor cabinets are subjected and the heat that the components themselves generate, are responsible for faults and malfunctions that will be increasingly repeated in the future, and will soar the costs of maintenance. Thinking on the adverse environmental conditions, Delvalle has high quality cooling systems without filter which provides many advantages:

The cabinet internal air is sucked from the top, cooled within the cooling unit and returned inside the cabinet with a high flow rate. This ensures optimum cooling of the entire cabinet interior and counteracts any hot electronic components protected by the cooling unit.

The Tropic cooling units can keep the cabinet in a level of protection IP54, due to the special internal configuration that keeps the outside air flow separately of the indoor air - tight and due to the special airtight enclosure adhesive coupling. These units require almost no maintenance and are designed to prevent clogging by solid contaminants that might be found in the environment. The Tropic cooling units keep high efficiency even under adverse environmental conditions; this important advantage reduces drastically the maintenance of these units, making possible that the cooling unit can work without the filter in the external air grillage. Most models have rotative compressors that enhance the performance of the refrigerator.

Quick mounting, reliable, low maintenance and optimum design. Adaptable to any part of the enclosure: doors, back or on the side.

Installation is quick and with all elements included in the package. All are predisposed for easy and safe electrical connections.

Delvalle provides a wide range of reference based on the voltage, which ranges from 350 to 4000 W and the type of thermostat (manual or digital). On request we can supply up to 10000W.

The Tropic cooling units are designed to minimize noise and to ensure a pleasant workplace. Also to protect the environment, all units are CFC free, thanks to the R134a refrigerants.

AIR COOLING UNITS (OUTDOOR) TROPIC SERIES IP54

APPLICATIONS

- When choosing the power of the cooling unit has to be considered a safety margin of at least 10% of the power measured considering the adverse conditions that have to work.
- Seal the door. The cuts and openings can cause condensation drips in the unit.
- Install the cooling unit on a wall or door but always as high as possible, so the air is taken from the top of the cabinet, where it is the hottest air.
- Place the electronic components within the cabinet in order to facilitate the air circulation. Do not obstruct the entrance or exit of air with the installed components. All the components that have their own internal ventilation, must take into account so the flow direction not obstruct the air flow cooling unit.
- Unplug the cooling unit if the cabinet doors are open in order to prevent excessive condensation. At this point install a limit switch and door open security alarm (you can see them in accessories section) and plug them into the door.
- The cooling unit is preset up to 35°C, which is the optimum temperature for any application. Attention¡ Never decrease the temperature below 30 degrees because it will leave the unit out of warranty due to incorrect use.
- The power line refrigeration unit must be protected by a time delay fuse a short calibrated according to the information of the technical unit.

STAINLESS STEEL VERSION

All air cooling units Tropic Series (outdoor) can be supplied with case stainless steel or with roof.
Specially designed to be installed in our stainless steel cabinets. In certain sectors such as the food sector, it is required a high level of hygiene to avoid infections; and in sectors as the microbiological, chemical or petrochemical sector is vital the resistance to the chemicals and environmental extremes agents. We recommend the use of our air conditioning and ventilation systems AISI 304L or AISI 316L).

ADVANTAGES

- High efficiency and low consumption.
- No maintenance.
- Quick installation.
- Option: digital thermostat.
- Less weight, less vibrations and better efficiency through the rotative compressor.
- Ecofriendly product: silent and CFC free.
- Ideal cooling and optimal protection of the enclosure (IP54).
- By request up to 10.000W.
- By request UL normative.

NORMATIVE

- IP54 Norm IEC 60529
- 2006/42/CE (machinery directive)
- 2006/95/CE (low voltage directive)
- 97/23/CE (ped directive)
- 2004/108/CE (electromagnetic compatibility directive)
- EN 61000: 6-2; 6-3 (electromagnetic compatibility normative)
- CEI EN 60335 (electrical equipement of machines normative)
- EN 378 (refrigerating sytems and heat pumps normative)

AIR COOLING UNITS (OUTDOOR) TROPIC SERIES IP54

REFERENCES

REFERENCES	MVOUT0350A	MVOUT0350B	MVOUT0350C
COOLING CAPACITY	350/370 W		
POWER SUPPLY	600/625 m³/h		
MAX. CURRENT	230V / 50-60Hz / 1ph	115 V / 50-60Hz / 1ph	400 V / 50-60Hz / 2ph
DELAYED FUSE	1,8/1,9 A	3,6/3,8 A	1,0/1,1 A
ABSORVED ELECTRIC POWER (A35A35)	4A	6A	4A
REFRIGERANT (type/charge)	260/270 W		
MAXIMUM PRESSURE	R134a		
OPERATING °C (ambient) (enclosure)	25 bar		
COMPRESSOR TYPE	+20 / +55°C - +20 / +45°C		
NOISE LEVEL	Rotative compressor		
ELECTRICAL CONNECTION	60 dB(A)		
DIMENSIONS (mm)	3-pole connector		
Dimensions (mm)	430 (height) x 280 (width) x 170 (depth)		
Version with case stainless steel	Add to the reference MVPTROPIC0350 (AISI 304L) or MVPTROPIC0350/16 (AISI 316L)		
Version with roof stainless steel	Add to the reference MVPTROPICVIS0350 (AISI 304L) or MVPTROPICVIS0350/16 (AISI 316L)		

REFERENCES	MVOUT0850A	MVOUT0850B	MVOUT0850C
COOLING CAPACITY	850/900 W		
POWER SUPPLY	600/625 m³/h		
MAX. CURRENT	230V / 50-60Hz / 1ph	115 V / 50-60Hz / 1ph	400 V / 50-60Hz / 2ph
DELAYED FUSE	2,65/2,75 A	5,30/5,40 A	1,65/1,75 A
ABSORVED ELECTRIC POWER (A35A35)	6A	10A	4A
REFRIGERANT (type/charge)	450/470 W		
MAXIMUM PRESSURE	R134a		
OPERATING °C (ambient) (enclosure)	25 bar		
COMPRESSOR TYPE	+20 / +55°C - +20 / +45°C		
NOISE LEVEL	Rotative compressor		
ELECTRICAL CONNECTION	62 dB(A)		
DIMENSIONS (mm)	3-pole connector		
Dimensions (mm)	635 (height) x 305 (width) x 210 (depth)		
Version with case stainless steel	Add to the reference MVPTROPIC0850 (AISI 304L) or MVPTROPIC2000/16 (AISI 316L)		
Version with roof stainless steel	Add to the reference MVPTROPICVIS0850 (AISI 304L) or MVPTROPICVIS0850/16 (AISI 316L)		

REFERENCES	MVOUT1450A	MVOUT1450B	MVOUT1450C
COOLING CAPACITY	1450/1500 W		
POWER SUPPLY	880/950 m³/h		
MAX. CURRENT	230V / 50-60Hz / 1ph	115 V / 50-60Hz / 1ph	400 V / 50-60Hz / 2ph
DELAYED FUSE	3,70/4,2 A	7,4/8,4 A	1,35/2,1 A
ABSORVED ELECTRIC POWER (A35A35)	6A	10A	4A
REFRIGERANT (type/charge)	650/700 W		
MAXIMUM PRESSURE	R134a		
OPERATING °C (ambient) (enclosure)	25 bar		
COMPRESSOR TYPE	+20 / +55°C - +20 / +45°C		
NOISE LEVEL	Rotative compressor		
ELECTRICAL CONNECTION	65 dB(A)		
DIMENSIONS (mm)	3-pole connector		
Dimensions (mm)	800 (height) x 400 (width) x 240 (depth)		
Version with case stainless steel	Add to the reference MVPTROPIC1450 (AISI 304L) or MVPTROPIC1450/16 (AISI 316L)		
Version with roof stainless steel	Add to the reference MVPTROPICVIS1450 (AISI 304L) or MVPTROPICVIS1450/16 (AISI 316L)		

REFERENCES	MVOUT2000A	MVOUT2000B	MVOUT2000C
COOLING CAPACITY	2000/2100 W		
POWER SUPPLY	880/950 m³/h		
MAX. CURRENT	230V / 50-60Hz / 1ph	115 V / 50-60Hz / 1ph	400 V / 50-60Hz / 2ph
DELAYED FUSE	6,6/6,9 A	13,8/13,8 A	3,3 / 3,5 A
ABSORVED ELECTRIC POWER (A35A35)	10A	16A	6A
REFRIGERANT (type/charge)	1060/1100 W		
MAXIMUM PRESSURE	R134a		
OPERATING °C (ambient) (enclosure)	27 bar		
COMPRESSOR TYPE	+20 / +55°C - +20 / +45°C		
NOISE LEVEL	Rotative compressor		
ELECTRICAL CONNECTION	70 dB(A)		
DIMENSIONS (mm)	3-pole connector		
Dimensions (mm)	1000 (height) x 400 (width) x 240 (depth)		
Version with case stainless steel	Add to the reference MVPTROPIC2000 (AISI 304L) or MVPTROPIC2000/16 (AISI 316L)		
Version with roof stainless steel	Add to the reference MVPTROPICVIS2000 (AISI 304L) or MVPTROPICVIS2000/16 (AISI 316L)		

REFERENCES	MVOUT3000C	MVOUT4000C
COOLING CAPACITY	2800 / 2950 W	3800/3950 W
POWER SUPPLY	400 V / 3ph / 50-460V / 3ph / 60	
MAX. CURRENT	2,2 A	2,7 A
DELAYED FUSE	11 / 11,8 A	14,5 / 15,1 A
ABSORVED ELECTRIC POWER (A35A35)	1550 / 1790 W	2080 / 2440 W
REFRIGERANT (type/charge)	R134a	
MAXIMUM PRESSURE	27 bar	
OPERATING °C (ambient) (enclosure)	+5 -20 / +55°C - +20 / +45°C	
COMPRESSOR TYPE	Rotative compressor	
NOISE LEVEL	70 dB(A)	
ELECTRICAL CONNECTION	3-pole connector	
DIMENSIONS (mm)	1500 (height) x 400 (width) x 250 (depth)	1500 (height) x 400 (width) x 250 (depth)
Version with case stainless steel	Add to the reference MVPTROPIC3000 (AISI 304L), MVPTROPIC3000/16 (AISI 316L), MVPTROPIC4000 (AISI 304L) or MVPTROPIC4000/16 (AISI 316L)	
Version with roof stainless steel	Add to the reference MVPTROPICVIS3000 (AISI 304L), MVPTROPICVIS3000/16 (AISI 316L), MVPTROPICVIS4000 (AISI 304L) or MVPTROPICVIS4000/16 (AISI 316L)	

STAINLESS STEEL THERMOELECTRIC COOLER COOLING + HEATING IP67



Examples



Example with casing

Easy Installation with Screws

The DelValle stainless steel thermoelectric cooler can be supplied in various types, from 30W to 300W, with a protection up to IP67 between the inside and outside of the panel once inserted. Also, depending on the model chosen, ranging from 2.3 A up to 15A.
By design the thermoelectric cooling is free of any liquid, so there is no risk of leakage.
And thanks to the "Peltier" latest technology developed over the Peltier effect, allows the installation and operation of the device at any position.
Another key feature is the no air exchange between the inside and outside so the dirt doesn't accumulate on the inside.

FOR MORE INFORMATION CLICK HERE

APPLICATIONS

Specially designed for industrial enclosures placed in areas where the components are very sensitive to temperature changes and it's necessary an uniform temperature on the inside, as PLC'S, PC´s, robots, electronic devices, video surveillance,...

SURFACE MOUNT HOUSING

The thermoelectric cooler has an extra structure that can be used if there is no depth inside the enclosure. This option is insteresting for later installations at existing systems.

COOLING AND HEATING

Cooling and heating functions with one device is possible. Just need to add "H" to the reference of exact model.

STAINLESS STEEL THERMOELECTRIC COOLER COOLING + HEATING IP67

FEATURES

- Designed for Indoor - Outdoor.
- Catalogue range that covers all needs.
- Design for water repelling.
- Installation and handling in any position, horizontal, vertical, lying.
- The dirt doesn't accumulate on the inside so the maintenance is near 0.
- Ecofriendly.
- Easy installation with screws.
- Stainless steel envelope.
- Accurate and precise for complex ambience.
- Low power consumption, quick amortization.
- Very reliable operation in any position and resistant to sudden temperature changes

NORMATIVE

- IP67 Norm IEC 60529.
- Approval UL.
- Life time +60.000 hours.
- Comply 2014/35/UE (low voltage directive).
- Comply EN 300386 and EN 55022 (electromagnetic compatibility normative).
- Comply EN 60950 (electrical security normative).

CONDENSATE TROUGH

- Suitable for the types MVTEC 50-150 (MVVE200) and MVTEC 75-300 (MVVE300).
- Collecting of condensate.
- Material: Stainless steel, thickness 1 mm.
- With hose connection, ID = 8 mm.
- Hose with length 2 mtr. is included.

REFERENCES

STAINLESS STEEL THERMOELECTRIC COOLER COOLING + HEATING IP65 / IP67						
REFERENCES	MVTEC030EH	MVTEC50EH	MVTEC75EH	MVTEC100EH	MVTEC150EH	MVTEC300EH
VOLTAGE	24V DC					
INPUT VOLTAGE RANGE	18-26V DC					12-28V DC
AMPERAGE	2,3A	2,5A	3,6A	5,2A	7,2A	15A
STARTING CURRENT	3,6A	3,9A	5,5A	7,5A	11A	18A
FUSE	4A (T)	4A (T)	6A (T)	10A (T)	10A (T)	20A (T)
COOLING CAPACITY Δ^T=0 KELVIN	30W	50W	75W	100W	150W	280W
HEATHING CAPACITY	45W	70W	100W	140W	200W	400W
NOMINAL POWER	55W	60W	87W	125W	173W	360W
SOUND PRESURE	56dB(A) @1m	62dB(A) @1m	65dB(A) @1m	64dB(A) @1m	69dB(A) @1m	80dB(A) @1m
AIR VOLUME POWER	20m³/h	50m³/h	70m³/h	80m³/h	80m³/h	285m³/h
PROTECTION	IP65	IP67				
SERVICE LIFE	60.000 h					
WEIGHT	1.750 gr.	3.200 gr.	5.550 gr.	7.200 gr.	7.300 gr.	18.500 gr.
OPERATING TEMPERATURE	-20°C +70°C					
NORMATIVE	UL / CE					CE

STAINLESS STEEL THERMOELECTRIC COOLER COOLING + HEATING IP65 WITH THERMOSTAT DUAL		
REFERENCES	MVTEC150_230V	MVTEC350_230V
VOLTAGE	100 - 240 V AC 50/60Hz	100 - 240 V AC
STARTING CURRENT	100 V AC › 2,5 A / 240 V AC › 1 A	100 V AC › 5,5 A / 240 V AC › 3 A
FUSE	100 V AC › 4 A (T) / 240 V AC › 2 A (T)	100 V AC › 6 A (T) / 240 V AC ›4 A (T)
CONNECTION	Conector de enchufe de 3 polos GST	-
COOLING CAPACITY Δ^T=0 KELVIN	150W	280W
HEATHING CAPACITY	200W	400W
NOMINAL POWER	185W	390W
CONTROLE RANGE	Heating: 0 a 20°C / Cooling: 30 a 50°C	-
OPERATING TEMPERATURE	-20°C +50°C	-20°C +70°C
SOUND PRESURE	65dB(A) @1m	80dB(A) @1m
AIR VOLUME POWER	80m³/h	285m³/h
PROTECTION	IP65	
SERVICE LIFE	60.000h	
WEIGHT	9.100 gr.	24.500 gr.
NORMATIVE	CE	

PELTIER COOLING FLAT DESIGN IP55

Respectful with the Environment

Peltier cooler IP55 compact, high performance and low power consumption, made of stainless steel, slim design ideal for thermoelectric cooling in cabinets and boxes of electronics. The most reliable cooling system with no maintenance. The Peltier cooling flat design Delvalle offers their customers may be supplied in different variants 50W or 100W. The warm side (outside) is designed in IP55 degree of protection. The integral overheat control with alarm switch allows safe operation even under harsh ambient conditions.
Due to its design the thermoelectric cooler is free from any liquids so that the risk of leakage does not exist. Moreover, the latest Peltier technology makes it possible to install and operate the cooler in any desired position.

Examples

FOR MORE INFORMATION CLICK HERE

FEATURES

- This objective was achieved by use of radial fans and high performance heat sinks and aptimized air flow.
- Enclosure cooling with Peltier technology.
- Extension and installation without additional accessories.
- Robust stainless-steel housing.
- Elegant flat design.
- Separate internal and external circulation.
- High-performance heatsinks.
- Optimized airflow.
- Directional cold air flow.
- Heating or cooling operation.
- Plug-in terminal.
- Due to the robust housing made of polished stainless steel, the devices are suitable for a variety of industrial applications.
- The two piece design of the housing allows either surface mounting or semi-recessed.
- The inner radial fan sucks warm air from the top of the cabinet.
- A directed stream of cold air is blown through the bottom opening in the cabinet.
- Due to the large distance between air intake and outlet a good air circulation is achieved.
- An absorber fleece in the exhaust port is used to collect condensate.

REFERENCES

PELTIER COOLING FLAT DESIGN IP55									
REFERENCES	OPERATING VOLTAGE	INPUT VOLTAGE RANGE	AMPERAGE	STARTING CURRENT	FUSE	COOLING CAPACITY AT $\Delta^{\dagger}$ = 0 KELVIN	HEATHING CAPACITY	NOMINAL POWER	AIR VOLUME FLOW
HTEC050E	24 V DC	18 - 26 V DC	3,7 A	8,5 A	10 A (T)	50 W	100 W	89 W	20 m³/h
HTEC100E	24 V DC	16 - 28 V DC	6,5 A	8,5 A	10 A (T)	100 W	180 W	156 W	120 m³/h

Phone +34 945 601 381
comercial@delvalle.es | www.delvallebox.com

ROOF MOUNTED AIR CONDITIONERS IP54

Example MVAIRT0500A



Examples MVAIRT1000A and MVAIRT1500A

Examples MVAIRT2000A,
MVAIRT3000A and MVAIRT4000A

Easy Installation

The range of roof mounted air conditioners have been designed to cool electrical enclosures to prevent failure of installed equipment.
The range of roof mounted air conditioners have been designed to cool electrical enclosures to prevent failure of installed equipment. They are quick and easy to install with simple cut outs and a drilling template supplied with each unit. Once installed the enclosure can be rated to IP54, which prevents dust entering in sufficient quantities that may cause interference with the installed equipment, and prevents damage from splashed water.

FOR MORE INFORMATION CLICK HERE

FEATURES

- IP54 (when installed on enclosu re with the same protection degree).
- Easy installation.
- Electronic controller.
- Temperature control with ON/OFF.
- Minimal maintenance.
- Galvanised sheet steel powder coated RAL7035.
- Operating temperature +20 |+55 (ambient) +20 |+45 (enclosure).

REFERENCES

ROOF MOUNTED AIR CONDITIONERS IP54						
REFERENCES	POWER SUPPLY (V | ph | Hz)	COOLING CAPACITY (W) A35/A35 / A35/A50	ABSORBED ELECTRIC POWER (W) A35/A35 / A35/A50	RATED CURRENT (A) A35/A35	AIR FLOW RATE (enclosure / m³/h)	DIMENSIONS (mm) (high, width, depth)
MVAIRT0500A	230 | 1 | 50/60	500/520 / 360/380	270/300 / 300/350	2.0 / 2.2	255 / 290	250 × 500 × 350
MVAIRT1000A	230 | 1 | 50/60	1000/1060 / 760/790	780/850 / 890/970	3.7 / 3.9	600 / 625	300 × 600 × 400
MVAIRT1500A	230 | 1 | 50/60	1460/1520 / 1090/1130	870/930 / 1050/1180	4.6 / 4.8	600 / 625	300 × 600 × 400
MVAIRT2000A	230 | 1 | 50/60	2000/2110 / 1500/1570	900/1050 / 1100/1250	5.1 / 6.2	860 / 950	400 × 800 × 400
MVAIRT3000A	400 | 3 | 50 / 460 | 3 | 60	2800/2930 / 2110/2300	1700/1810 / 2270/2390	2.8 / 3.4	860 / 950	400 × 800 × 400
MVAIRT4000A	400 | 3 | 50 / 460 | 3 | 60	3800/3980 / 2840/3150	1900/2030 / 2450/2600	4.0 / 4.8	860 / 950	400 × 800 × 400

ROOF FAN VIPER SERIES IP44 IP54



Example models 600 / 860 / 1000



Example model 1500

ECOfriendly: Low Consumption, High Efficiency and Very Silent

Roof fan, specially designed for extracting heat from the top of the cabinet, for achieving a perfect air flow in the inside.
Easy to install, provides protection from IP44 to IP54 depending on the model.
Air flow range from 600 m³ to 1.500 m³ per hour, working silent and sealed for both waterproof and dust proof.
Performance and durability, 50,000 hours at 40°C, for clean air inside cabinets.

FOR MORE INFORMATION CLICK HERE

ADVANTAGES

- Life time +50.000 hours at 40°C.
- Gasket of polyethylene or PVC (depending on model).
- Air flow direction "inside-out".
- Ball bearing. Maximum engine efficiency and reliability.
- Thermal overload protection.
- Duty cycle 100%.
- With internal security grid that not allow access to the fan wheel.
- The fan is supplied with filter desingned for easy clearing and highly resistant.

REFERENCES

ROOF FAN - VIPER SERIES IP44 - IP54									
REFERENCES	AIR FLOW RATE	POWER SUPPLY	POWER CONSUMPTION	CURRENT CONSUMPTION	ELECTRIC CONNECTION	RUIDO	HIGH (mm)	WIDTH (mm)	HEIGHT (mm)
MVPT0600IP44A	600m³/h	230V/50-60Hz	70W	0,32A	4-pole terminal 2,5 mm²	64dB	400	350	102
MVPT0600IP44B	600m³/h	115V/50-60Hz	70W	0,64A	4-pole terminal 2,5 mm²	64dB	400	350	102
MVPT0860IP44A	860m³/h	230V/50-60Hz	85W	0,43A	4-pole terminal 2,5 mm²	72dB	400	350	102
MVPT0860IP44A	860m³/h	115V/50-60Hz	85W	0,86A	4-pole terminal 2,5 mm²	72dB	400	350	102
MVPT1000IP44A	1000m³/h	230V/50-60Hz	120W	0,50A	4-pole terminal 2,5 mm²	72dB	400	350	102
MVPT1000IP44B	1000m³/h	115V/50-60Hz	120W	1,00A	4-pole terminal 2,5 mm²	72dB	400	350	102
MVPT1500IP44A	1500m³/h	230V/50-60Hz	160W	0,70 A	4-pole terminal	74dB	540	3901	28
MVPT1500IP44B	1500m³/h	115V/50-60Hz	160W	1,40A	4-pole terminal	74dB	540	3901	28

Version Normative UL	Add "UL" a la refrence (not available for MVPT1500IP44A and MVPT1500IP44B models)
Version EMC	Add "M" a la refrence (not available for MVPT1500IP44A and MVPT1500IP44B models)
Version IP54	Change "IP44" for "IP54" in the reference

DEHUMIDIFIER ELECTRICAL ENCLOSURE



Examples



The Solution you Need to Avoid Moisture in your Enclosure

The dehumidifier Delvalle is a special form of switch cabinet cooling technology. There is a fan-free cold plate in the indoor of the switch cabinet, on which the air humidity completely condenses. The resulting water droplets run off the plate, are collected in a runnel and drained out of the switch cabinet by a small tube. In order to avoid the formation of ice, the cold plate is equipped with temperature sensor, which keeps the temperature of the cold plate in the ideal range by means of the integrated regulator. Just like our switch cabinet coolers, the switch cabinet dehumidifier is easily installed and is equipped with a temperature protection switch and an alarm relay.
We have 3 different versions for various cases of application.

FOR MORE INFORMATION CLICK HERE

ADVANTAGES

- Installation into the side panel or inside the enclosure possible.
- Significant energy saving in comparison to conventional heaters.
- Connection by spring-cage terminals.
- Alarm switch in case of overheating.
- Equipped with temperature sensor to icing prevent.
- Dirt cannot accumulate inside so the maintenance is zero.
- Easy installation with screws.
- Tested in extreme weather.

REFERENCES

REFERENCES	MVDH0901	MVDH0902	MVDH0903
DESCRIPTION	Open condesate drip tray	Closed housing, with fan	Closed housing, with fan, with condensate pump
APPLICATIONS	Stationary operation vertical position	Position mobile applications vertical position	Mobile applications variable position or rotation
DIMENSIONS (mm)	160x113x99	160/200x113/150x133	160/200x113/150x148
VOLTAGE	24 V DC		
POWER CONSUMPTION	47 W	50 W	56 W
CONNECTION	Connection cable	Spring-cage terminals	
OPERATING TEMPERATURE	-40°C +60°C		
DEGREE OF PROTECTION	IP55 outdoor / IP20 indoor	IP55 outdoor / IP20 indoor	IP65 outdoor / IP20 indoor

TEMPERATURE AND HUMIDITY SMART SENSOR



Example

Is Suitable for Installation Inside and Outside the Enclosure

The temperature and humidity compact smart sensor Delvalle electronically records temperature and humidity and converts the measured data into a standardized analog 4-20 mA or a digital IO-Link signal. The converted value signals can be utilized or further processed by a control or monitoring unit. The smart sensor is suitable for installation inside and outside the enclosure, even in harsh environmental conditions as can be found in the wind power industry: in shielded outdoor areas and exposed to vibrations.

FOR MORE INFORMATION CLICK HERE

FEATURES

- Measuring signals analog (4-20 mA)/digital (IO-Link): temperature, humidity events, diagnosis, device data.
- Max. reaction time: 3 min.
- Load resistance (external): ≤Ω500 (4-20mA only).
- Connection: M12 round plug connector, IEC 61076-2-101, 4-pin. A-coded, shielded.
- Electrical protection: reverse-polarity, short circuit, overvoltage protection.
- Mounting: clip for 35 mm DIN rail, EN 60715 and screw fixing M5.
- Casing: plastic according to UL94 V-0, light grey.
- Fitting position: vertical (connection on top).
- Storage temperature: -40 to +85°C.
- Operating / Storage humidity: max. 90% RH (non-condensing).
- Protection type / Protection class: IP20 sensor only IP57) / III (SELV).
- Protection class IP20 (sensor only IP57) / III (SELV).
- Approvals: VDE and UL File N° E500143 (acc. to IEC 61010-1 / DIN EN 61010-1).

REFERENCES

COMPACT SMART SENSOR						
REFERENCES	INTERFACE	OPERATING VOLTAGE	POWER CONSUMPTION MAX.	TEMPERATURE MEASURING RANGE	HUMIDITY MEASURING RANGE	OPERATING TEMPERATURE
DV014E.01	4 - 20 mA (analog)	DC 24 V (DC 12-30 V)	1,8 W (typically 0,4 W)	-40 to +60°C ± 1 K	0 to 100 % RH ± 4%*	-40 to +70°C
DV014E.02	IO-Link (digital, specified acc. to version 1.1)	DC 24 V (DC 18-30 V)	0.3 W	-40 to +80°C ± 0.3 K	0 to 100% RH ± 3%*	-40 to +80°C

UL RESISTANCE HEATERS MAX SERIES



Examples heaters without fan 10 / 20 / 30 / 45 W



Examples heaters without fan 60 / 75 / 100 / 150 W



Examples heaters with fan 130 / 250 / 400 W

NORMATIVE

- UL approved. File N° E351869
- Built under directive 2014/35/UE low voltage.

Simple and Quick Mounting

Temperature variations inside control cabinets and housings, especially when installed outside, lead to condensation of water and consequently to malfunction and corrosion. Through the use of enclosure heaters, temperature variations can be reduced and condensation of water avoided
The heaters are equipped with a PTC heating elements and are self-regulating, operate without temperature control and have a thermal output that varies only little over a wide voltage range.
An optimum heat dissipation is achieved through profiled aluminum housings with small dimensions
Heaters for thermal outputs of 130W to 1000W are equipped with fans in order to produce an air circulation.

FOR MORE INFORMATION CLICK HERE

APPLICATIONS

Enclosure heaters are used in traffic light, traffic monitoring systems, ticket machines, crane systems, telecommunication systems as well as in machines for foodstuff industry.

ADVANTAGES

- Self-regulating PTC.
- Simple and quick mounting in DIN 35mm
- Attachment with clip on mounting rail.
- Optimized profile with improved heating power and smaller surface temperature.
- Alternative for voltage ranges 12-24v or 110-240V.

UL RESISTANCE HEATERS MAX SERIES

REFERENCES



UL RESISTANCE - MAX SERIES									
REFERENCES	THERMAL OUTPUT AT 20°C	HEATING ELEMENT	WORK TEMPERATURE	VOLTAGE (AC/DC)	CONNECTING	PROTECTION RATING	HEIGHT (mm)	WIDTH (mm)	DEPTH (mm)
MVRC0010UL	10W	PTC	-40°C .... +70°C	100-240V / 12-24V	2 pole spring cage terminal	IP20 Clase II	80	30	60
MVRC0020UL	20W	PTC	-40°C .... +70°C	100-240V / 12-24V	2 pole spring cage terminal	IP20 Clase II	100	30	60
MVRC0030UL	30W	PTC	-40°C .... +70°C	100-240V / 12-24V	2 pole spring cage terminal	IP20 Clase II	120	30	60
MVRC0045UL	45W	PTC	-40°C .... +70°C	100-240V / 12-24V	2 pole spring cage terminal	IP20 Clase II	170	30	60

Assembly and connections without tool. Connection with spring-cage terminal.



UL RESISTANCE - MAX SERIES									
REFERENCES	THERMAL OUTPUT AT 20°C	HEATING ELEMENT	WORK TEMPERATURE	VOLTAGE (AC/DC)	CONNECTING	PROTECTION RATING	HEIGHT (mm)	WIDTH (mm)	DEPTH (mm)
MVRC0060UL	60W	PTC	-40°C .... +70°C	100-240V / 12-24V	2 pole spring cage terminal	IP20 Clase II	105	80	83
MVRC0075UL	75W	PTC	-40°C .... +70°C	100-240V / 12-24V	2 pole spring cage terminal	IP20 Clase II	155	80	83
MVRC0100UL	100W	PTC	-40°C .... +70°C	100-240V / 12-24V	2 pole spring cage terminal	IP20 Clase II	185	80	83
MVRC0150UL	150W	PTC	-40°C .... +70°C	100-240V / 12-24V	2 pole spring cage terminal	IP20 Clase II	245	80	83

Connection with screw terminals



UL RESISTANCE - MAX SERIES									
REFERENCES	THERMAL OUTPUT AT 20°C	HEATING ELEMENT	WORK TEMPERATURE	VOLTAGE (AC/DC)	CONNECTING	PROTECTION RATING	HEIGHT (mm)	WIDTH (mm)	DEPTH (mm)
MVRC130UL	130W	PTC	-40°C .... +70°C	100-240V / 12-24V	2 pole spring cage terminal	IP20 Clase II	155	80	110
MVRC250UL	250W	PTC	-40°C .... +70°C	100-240V / 12-24V	2 pole spring cage terminal	IP20 Clase II	155	80	110
MVRC400UL	400W	PTC	-40°C .... +70°C	100-240V / 12-24V	2 pole spring cage terminal	IP20 Clase II	235	80	110

Heaters with fan for optimal air circulation. Pluggable terminal block.

ALUMINIUM RESISTANCE HEATER



Examples heaters without fan



Examples heaters with fan

Full Range of Models

These heaters reduce temperature variation and avoid water condensation which may cause malfunction and corrosion of cabinets and boxes.
Heaters include PTC heating components. They are self-regulating and available up to 750 W. Their thermal output varies according to voltage.
You will get optimal heat dissipation thanks to small profiled aluminium cases covering our heaters.
They are used in traffic control systems, labeling machines, crane systems, telecommunications systems, as well as machines for food industry.

FOR MORE INFORMATION CLICK HERE

REFERENCES

ALUMINIUM RESISTANCE HEATER									
REFERENCES	THERMAL OUTPUT AT 20°C	HEATING ELEMENT	WORK TEMPERATURE	VOLTAGE (AC/DC)	CONNECTING	PROTECTION RATING	HEIGHT (mm)	WIDTH (mm)	DEPTH (mm)
MVRC025	25W	PTC	-40°C ....+70°C	110V - 250V	2 pole 2,5 mm²	IP20 Clase II	90	50	80
MVRC050	50W	PTC	-40°C ....+70°C	110V - 250V	2 pole 2,5 mm²	IP20 Clase II	110	50	80
MVRC075	75W	PTC	-40°C ....+70°C	110V - 250V	2 pole 2,5 mm²	IP20 Clase II	160	50	80
MVRC0100	100W	PTC	-40°C ....+70°C	110V - 250V	2 pole 2,5 mm²	IP20 Clase II	110	90	80
MVRC0125	125W	PTC	-40°C ....+70°C	110V - 250V	2 pole 2,5 mm²	IP20 Clase II	160	90	80
MVRC0150	150W	PTC	-40°C ....+70°C	110V - 250V	2 pole 2,5 mm²	IP20 Clase II	220	90	80

Heaters without fan

ALUMINIUM RESISTANCE HEATER									
REFERENCES	THERMAL OUTPUT AT 20°C	HEATING ELEMENT	WORK TEMPERATURE	VOLTAGE (AC/DC)	CONNECTING	PROTECTION RATING	HEIGHT (mm)	WIDTH (mm)	DEPTH (mm)
MVRV250A	250W	PTC	-25°C ....+70°C	230V	2 pole + ground 2,5 mm²	IP20 Clase I	135	112	82
MVRV250B	250W	PTC	-25°C ....+70°C	115V	2 pole + ground 2,5 mm²	IP20 Clase I	135	112	82
MVRV400A	400W	PTC	-25°C ....+70°C	230V	2 pole + ground 2,5 mm²	IP20 Clase I	165	112	82
MVRV400B	400W	PTC	-25°C ....+70°C	115V	2 pole + ground 2,5 mm²	IP20 Clase I	165	112	82
MVRV500A	500W	PTC	-25°C ....+70°C	230V	2 pole + ground 2,5 mm²	IP20 Clase I	165	112	82
MVRV500B	500W	PTC	-25°C ....+70°C	115V	2 pole + ground 2,5 mm²	IP20 Clase I	165	112	82
MVRV750A	750W	PTC	-25°C ....+70°C	230V	2 pole + ground 2,5 mm²	IP20 Clase I	225	112	82
MVRV750B	750W	PTC	-25°C ....+70°C	115V	2 pole + ground 2,5 mm²	IP20 Clase I	225	112	82

Heaters with fan

THERMOSTATS AND THERMO-HYGROSTATS



Example thermostat



Example thermostats dual



Example thermo-hygrostat



Example hygrostat

Compact Design and High Capacity

Thermostats and hygrostats for racks and cabinets, of small size, dual function, heat, cold,... All of them easy to install, reliable, economical and accurate, adaptable to any ventilation unit or heat resistance of our catalogue.
The Electromechanical Humidistat which automatically controls the humidity inside the electrical panels, sends the signal to the fan or heater, depending on what it is necessary, to prevent any condensation inside the electrical panel. The LED light notifies of the operation status.

FOR MORE INFORMATION CLICK HERE

FEATURES

- Various contact options NO or NC, dual, higostratos or thermo-hygrostat.
- Maximum reliability and efficiency.
- Mounting on DIN rail 35 mm.
- Ecofriendly product.
- Colour RAL 7035.

NORMATIVE

- IP20 Norm IEC 60529.
- Built under directive 2006/95/CE low voltage.
- UL approved. File N° E348803.
- Mounting on DIN rail 35 mm EN 50022.

REFERENCES

THERMOSTATS AND THERMO-HYGROSTATS						
REFERENCES	TYPE	DIMENSIONS (mm)	WEIGHT	TEMPERATURE RANGE	HYSTERESIS / HYSTERESIS RELATIVE HUMIDITY	ELECTRICAL CONNECTIONS
MVKTMM1140	Thermostat NO	61x34x35	48	-25 +80°C	7°C (tolerance +/-4)	2 pole terminal 2,5 mm² wire
MVKTMM1141	Thermostat NC	61x34x35	48	-25 +80°C	7°C (tolerance +/-4)	2 pole terminal 2,5 mm² wire
MVKTMM1142	Thermostat dual NO/NC	61x53x35	80	-25 +80°C	7°C (tolerance +/-4)	2 pole terminal 2,5 mm² wire
MVKT205	Thermostat dual	34x86x62,5	110	0/20°C - 30/50°C	ca. 1K	Screw terminals 0,5/2,5mm²
MVKH35	Higrostat	91x54x48	170	-10 +50	5%	3-pole terminal for 2,5mm2 wire
MVKTMM1143B	Thermo Higrostat	61x53x35	105	-20 +80°C	5%	1 pole terminal 2,5 mm² wire
MVKTMM1143A	Thermo Higrostat	61x53x35	105	-20 +80°C	5%	1 pole terminal 2,5 mm² wire

Contact NC (red): Typically used for controlling heaters. Contact NO (blue): Typically used for controlling ventilation devices.

STAINLESS STEEL VENT DRAINS FOR THERMOELECTRIC COOLERS AND ENCLOSURES IP66



Example

Helps Reduce Corrosion that Can Limit the Life of Internal Electronic Components

The vent drains allows accumulated water to drain out the bottom of an electrical enclosure. The UL UL/cUL, NEMA Type 4, 4X vent drains also function as an air pressure equalizer, reducing the harmful effects of temperature-induced vacuums that could pull water and moisture into the enclosure.

FOR MORE INFORMATION CLICK HERE

FEATURES

- Uses gravity to remove collected liquids.
- One-way mechanical shut-off when pressure is equalized prevents water and contaminants from entering the enclosure.
- Helps reduce corrosion that can limit the life of internal electronic components.
- Maintains enclosures UL Type rating when properly installed.

NORMATIVE

- Certificate UL Nema 4x, 12, 3r, 1.
- IP(W)66 corrosive environments.

DIMENSIONS AND REFERENCES

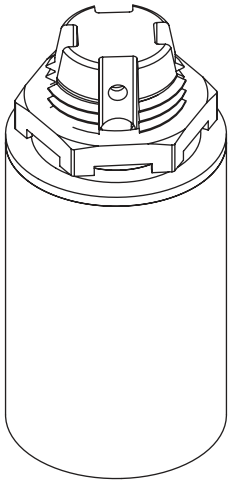

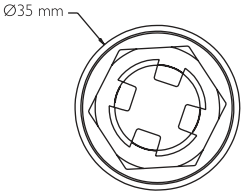

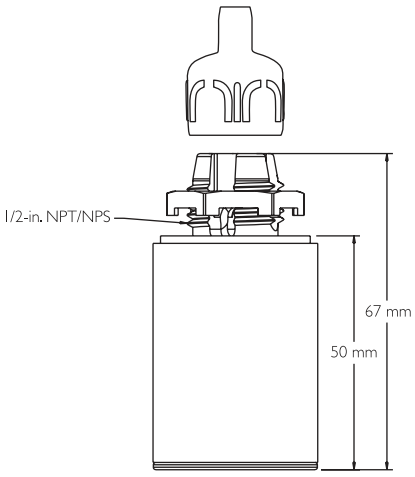

REFERENCE STAINLESS STEEL VENT DRAIN			
REFERENCE	DESCRIPTION	HIGH (mm)	Ø (mm)
MVVD300.I	Stainless steel AISI 304	67	35

NYLON VENT DRAINS FOR THERMOELECTRIC COOLERS AND ENCLOSURES IP68 IP69



Example

The Degree of Protection of the Enclosure is Maintained Up to IP68/69

Due to the low opening-pressure of the valve, the vent drain installed on the underside of the cabinet can also drain water that is standing on the bottom almost completely. With proper installation and through the built-in membrane and check valve, the degree of protection of the enclosure is maintained up to IP68/69.

FOR MORE INFORMATION CLICK HERE

ADVANTAGES

- Reduction of maintenance and costs.
- Integrated check valve for a safe drainage.
- A high degree of enclosure protection is maintained – water and dustproof.
- Universal hose connection.

NORMATIVE

- Degree of protection: IP68 / IP69.
- Operating temperature: -40 °C to +70 °C.

FEATURES

- Simultaneous drainage of condensate from cooling /dehumidifying devices and from the housing bottom.
- Mounting below the enclosure bottom.
- Hose connection for cooling device.
- Thread: M20 x 1,5.
- Tightening torque: 4 Nm.
- Material housing: Nylon PA 12.
- Material sealing gasket: silikon.

DIMENSIONS AND REFERENCES

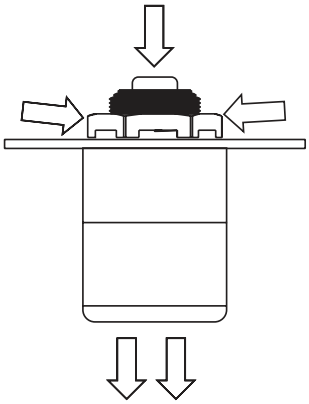

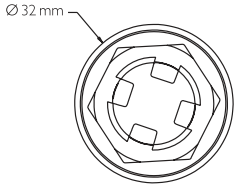

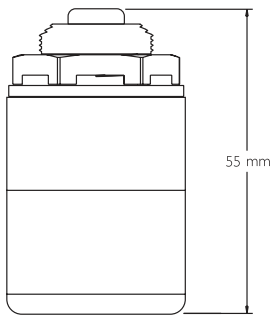

REFERENCE NYLON VENT DRAIN		
REFERENCE	HIGH (mm)	Ø (mm)
MVVD400.P	55	32

VENTILATION PLUGS IP68

Ventilation plugs; (polyamide, nickel plated and stainless steel) reduce the adverse effects of humidity in the environment circulation by preventing pressure increase inside the enclosure and limiting temperature increase through air.

- Material:
  - Polyamide PA6
  - Nickel-plated brass
  - Stainless steel AISI 303L
- Sealing ring: NBR
- Membrane: Hydrophobic-Oleophobic
- Lock nut included
- ULtraviolet (UV) resistance
- Protection: IP68
- Temperature resistance: -40°C +105°C
- Application area:
  - Automation technology
  - Wind-solar energy
  - Industrial
  - Equipment
- Benefits:
  - Pressure compensating seal prevents build up of pressure inside of electronic enclosure due to enviromental temperature cycling.
  - It extends the life time on complete system with it's basic feature.
  - Prevents the enclosures against corrosion.

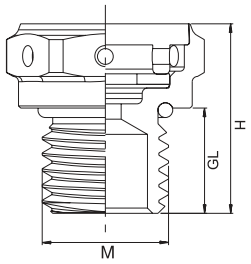

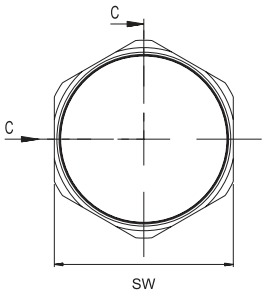

REFERENCES VENTILATION PLUG

REFERENCES	MATERIAL	SIZE	H (mm)	GL (mm)	(mm)	THREAD DIAMETER (mm)	HOLE DIAMETER (mm)	AVERAGE AIR FLOW (l/h)	WATER INTRUSION (mbar)	MINIMUM
MVVAC02	Polyamide PA6	M12x1,5	15	6	18	12	12,3	150	0,2	100
MVVAC02L	Polyamide PA6	M12x1,5	19	10	18	12	12,3	150	0,2	100
MVVAC03	Nickel-plated brass	M12x1,5	14	6	17	12	12,3	150	0,5	50
MVVAC03L	Nickel-plated brass	M12x1,5	18	10	17	12	12,3	150	0,5	50
MVVAC01	Stainless steel AISI303L	M12x1,5	14	6	17	12	12,3	150	0,8	30
MVVAC01L	Stainless steel AISI303L	M12x1,5	18	10	17	12	12,3	150	0,8	30



CLIMATE CONTROL COOLING FOR ELECTRICAL ENCLOSURES

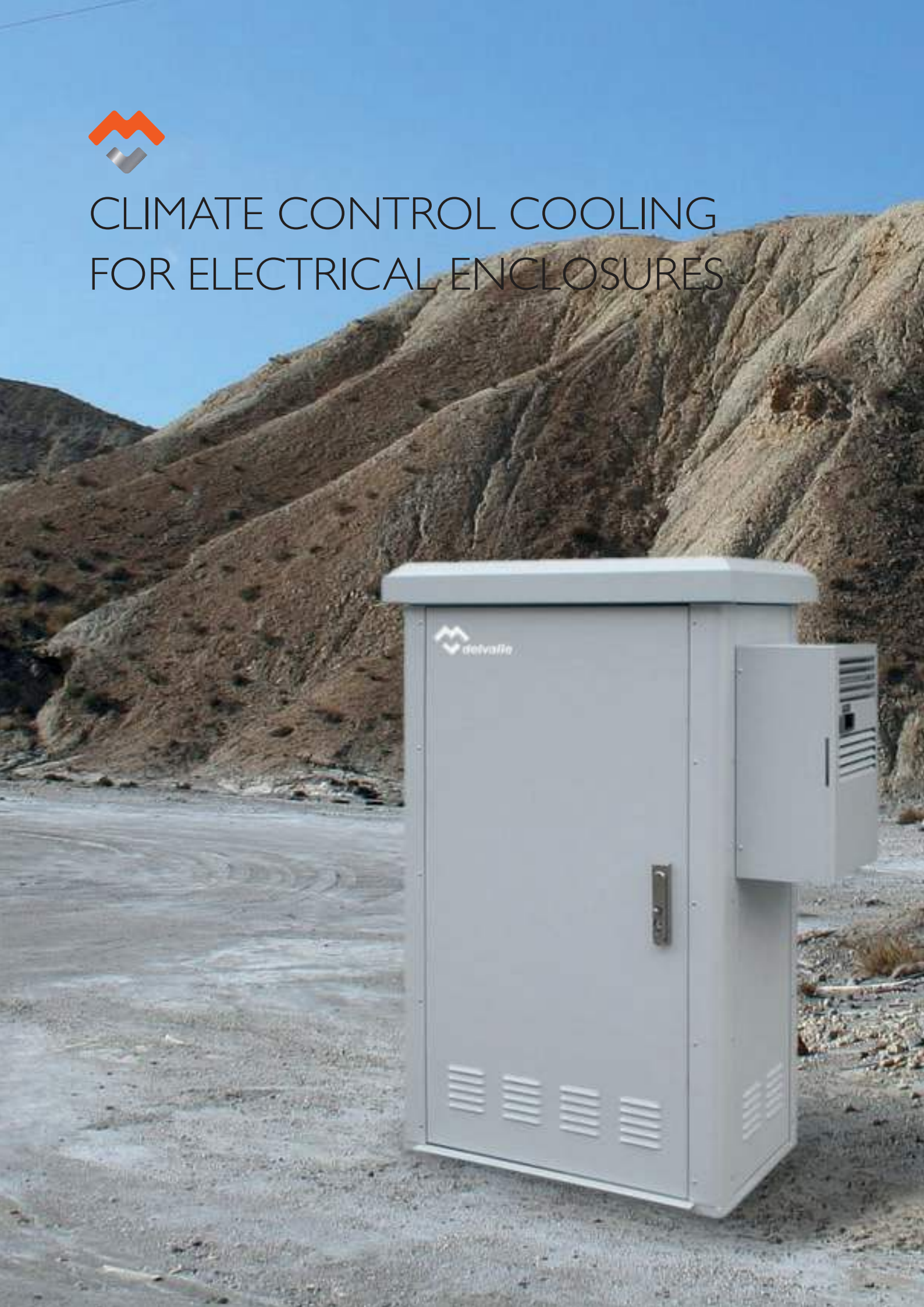

FOR MORE INFORMATION CLICK HERE

CUSTOMIZED ENCLOSURE SOLUTIONS DELVALLE

Delvalle has more than 50 years of experience using the latest technology to implement and obtain the most innovative products on offer to all our customers. Delvalle is an ideal partner, combining an advanced and wide range of products at very competitive prices.

The customized manufacture of all electrical enclosures and cabinets Delvallebox is carry out with the most advanced technical methods and with the precision and consciousness of a craftsman. This makes the difference from competitors and is the best way to gain our customers´ trust.
In Delvallebox we bear in mind that customers perceive the quality very clearly. In every product (for instance, in the cabinets here presented) safety and useful solutions are what customers value most.



STAINLESS STEEL INDUSTRIAL ENCLOSURES



OUTDOOR ELECTRICAL ENCLOSURES



GLOBAL ELECTRICAL SOLUTIONS FOR URBAN AREAS



GALVANIZED STEEL ELECTRICAL ENCLOSURES

Phone +34 945 601 381
comercial@delvalle.es | www.delvallebox.com



SLOPED ROOF
ENCLOSURES - HYGIENIC

ATEX INDUSTRIAL ENCLOSURES



INDUSTRIAL ENCLOSURES IP66, IP67, IP68 AND IP69K

Buy direct from manufacturer of custom made IP66, IP67, IP68 and IP69K heavy duty industrial and waterproof electrical enclosures AISI 304L and 316L made by standard IEC 60529. Delvalle has tested all sizes and dimensions of waterproof enclosures according to EN 60529:2018. All weather resistant enclosures are more than simply rainproof, they meet a minimum of Nema 4X and IP66, IP67, IP68 and IP69k requirements to ensure your electronics are protected. From Juntion boxes to industrial enclosures, Delvalle weatherproof enclosures offer a wide range of sizes and styles to keep your project waterproof.





CABLE GLANDS FOR
ELECTRICAL ENCLOSURES

CLIMATE CONTROL COOLING FOR ENCLOSURES



delvalle®

INDUSTRIAL ENCLOSURE SOLUTIONS



Paso del Prao, 6. 01320 Oyón (Álava). Spain
Phone +34 945 601 381
comercial@delvalle.es | **www.delvallebox.com**

Contact us, we will be available at any time