·WE ARE·
MANUFACTURERS
CERTIFIED

delvalle®
INDUSTRIAL ENCLOSURE SOLUTIONS

OUTDOOR HEAVY DUTY ELECTRICAL ENCLOSURES





comercial@delvalle.es | www.delvallebox.com

OUTDOOR TELECOM 19 RACK - STORM SERIES IP66 4

OUTDOOR ENCLOSURES - DESERT SERIES IP66 9

RACK WITH DOUBLE WALL - TORNADO SERIES IP66 17

OUTDOOR ENCLOSURE - TROPICO SERIES IP66 24

STAINLESS STEEL SOS POST IP66 30

ANTI-POSTER OUTDOOR ENCLOSURE IP66 33

Paso del Prao, 6. 01320 Oyón (Álava). Spain
Phone +34 945 601 381
comercial@delvalle.es | **www.delvallebox.com**

I.21



WE PUT AT YOUR DISPOSAL

We offer over **45 years** providing solutions to demanding customers who require very specific characteristics and behaviour according to the sector and their needs.

WHEREVER YOU GO

We are committed to working closely with our customers, providing them with **exceptional service** and offering an advanced and extensive range of products with very competitive prices.

HIGH STANDARD OF QUALITY AND SERVICES

We only use materials provided by companies who offer the very **highest quality**, suitable and certified products. Our success is due to top quality assurance: ISO 9001, SGS, UL, TÜV, ISO 14000 and ISO45001.

CUSTOMIZE TOTALLY YOUR ENCLOSURE

Our production systems can give custom-made solutions **on demand.** Every colour from RAL chart is available to be personalized. A variety of protection standards thanks to our own painting facilities.

EU

100%
Entirely designed and manufactured in Europe

CONTACT US

Confidentiality, reliability & quality

www.delvallebox.com
comercial@delvalle.es
+34 945 601 381

ALSO ONLINE

Please contact our technical sales department

A team of professionals with high experience and ability to solve all your queries



OUTDOOR TELECOM 19 RACK
STORM SERIES IP66



Example

Large Space Inside for Rack Equipments

Outdoor Storm Series enclosure, designed to be placed in urban or interurban areas, protecting the electronic equipment needed for lighting, signage and video surveillance. Its application range is extended with external telecommunication installations, telephones, computers, weather stations and any other application that needs extra protection. The Storm Series is characterized by its high resistance to corrosion and wear, ideal for placement in cities and highways, spacious interior; thanks to its construction, it achieves greater width and height than the rest. Provided with approved water repellent injected seals on exterior doors allowing for tightness and stabilising an ideal temperature for placement in areas of extreme temperature or hostile weather environments. Made of stainless steel AISI 304L (EN 14306) wiyh polyester paint finish, and features a handle made of a material highly resistant to vandalism and forced openings.
The interior design allows easy placement of racks, mounting plates or separators.

FOR MORE INFORMATION CLICK HERE



OUTDOOR TELECOM 19 RACK **STORM SERIES** IP66

APPLICATIONS

Our Storm Series, design, finishing and sealing make it ideal for outdoor use.
As its name suggests its placement is usually on roads, signalling or lighting, and use in weather stations, telecommunications, telephones, fibre optics and video surveillance in urban or interurban areas.

ADVANTAGES

- Very good mechanical properties and high resistance to shape distorsion.
- With water repellent injected seal.
- Door retained with stoppers.
- The enclosure includes anti-vandalism locks and handles suitable for semi-cylindrical profile locks.
- Maintenance free for life over 30 years.
- Delvalle can adapt this design to the measurements required by the client, retaining the fundamentals of insulation, sealing and safety.
- Strength, durability and long life.
- High resistance to vandalism.
- Specially designed for urban and interurban areas, storms or highways.
- High resistance to corrosion and wear.
- Large space inside for rack equipments.
- Two versions: galvanized steel and painted galvanized steel.

OPTIONS

- Designs and pictures available on request.
- Plinths at base for enclosures of any size. They allow enclosures to stand over the floor, with extra room for cable entry. Available 100mm (standard) and 200mm high.
- Stainless steel AISI 316L, EN 1.4404.
- Ventilation KIT (Fan, resistance heating and dual thermostat)
- Graffiti-proof protective paint
- EMC version according to 2014/30/UE of electromagnetic compatibility.

OPTION SUN REFLECTIVE TREATMENT COATING "SUNTERM" FOR OUTDOOR ELECTRICAL ENCLOSURES

SunTerm

SunTerm treatment coating for use in outdoor electrical enclosures, contain a reflective component that deflects the infrared light, and thus the half of the sun's total energy, from any substrate that it coats. As a result, the surface of the substrate, and any interior ambient that it protect, are cooler than a standard coating.

As a treatment solution SunTerm also gives you high corrosion resistant for outdoor environments. Temperature Outdoor Resistant -40°C +80 °C.

Test under lab controlled conditions showed that the aluminum substrate being coated with SunTerm is 7oC cooler than coated with standard coating inside.

OUTDOOR TELECOM 19 RACK STORM SERIES IP66

OUTDOOR FINISH ANTIPOSTER

Outdoor cabinet antiposter, specially designed for public lighting, urban furniture, city hall, shopping centers, buildings...

Its design with rumble strips prevents the sticking of posters. It is also aesthetically more elegant

Available in two materials: aluminium and galvanized steel with epoxy - polyester paint.



Example

COMPONENTS

Delvalle advises in all Storm Series, the following components:

- Roof (standard series)
- Door retainer (optional)
- Plinths at base (optional)
- Rack support (optional)



PLINTHS AT BASE



DOOR RETAINER



ROOF



RACK SUPPORT

VENTILATION KIT

REFERENCE	TR01 AC01

After studying the requirements that our customers demand in ventilation issues, Delvalle includes a kit of accessories consisting of the following elements:

- Roof fan



Temperature variations inside control cabinets and housings, especially when installed outside, lead to condensation of water and consequently to malfunction and corrosion

- Resistance heating



Placing a fan at the top of the cabinet brings a continuous ow of air inside

- Dual thermostat



The electromechanical humidistat which automatically controls the humidity inside the electrical panels, sends the signal to the fan or heater

OUTDOOR TELECOM 19 RACK **STORM SERIES** IP66





10 YEARS
STAINLESS ANTICORROSIVE **GUARANTEE**

FLAT AND VENTILATED ROOF OR SEALED OPTION

5 YEARS
MECHANICAL PARTS **GUARANTEE**

NORMATIVE

- From IP54 to IP65 Norm EN 62208 and EN 60529.
- Maximum IK10 resistance Norm IEC 62208 and EN 50102.
- En 61969-3 Mechanical Structures for Electronic Equipment - outdoor enclosures -.
- IEC 60068-2-30 and IEC 60068-2-11.
- Built to CE standards. 2014/35/UE.
- UL Nema 4x, 12, 1, 3r by request. Nº File E342220.
- Shock resistant against sharp objects EN 60439-5.
- RoHs compliant.
- Maximum voltage 1000 V.
- Temperature resistant: -40°C +100°C (short time +160°C).
- Option silicone gasket: from -60°C to +180°C (short time up to +350°C).

OUTDOOR TELECOM 19 RACK **STORM SERIES** IP66

PLAN

CLICK HERE TO DOWNLOAD
THE FILES CAD - PLANS - CERTIFICATES

FRONT DOOR

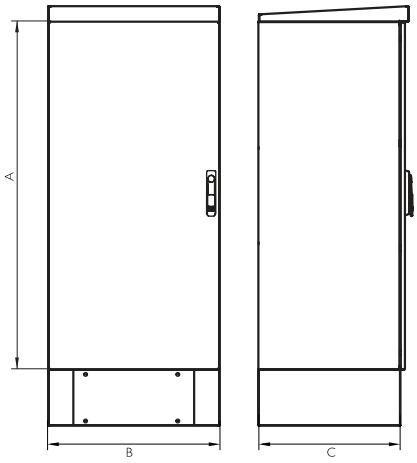

SELF-COOLED AND WITH VENTILATION BRACKETS



FRONT AND REAR DOOR

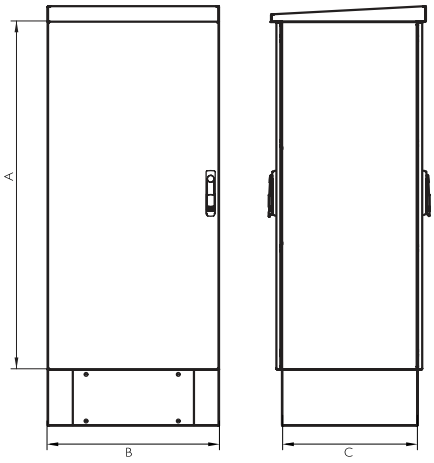

REFERENCES

REFERENCES		DIMENSIONS (mm)			
STAINLESS STEEL	STAINLESS STEEL FRONT AND REAR DOOR	HEIGHT -A-	WIDTH -B-	DEPTH -C-	RACKS
RD606040	RD606040P	600	600	400	12 U
RD606050	RD606050P	600	600	500	12 U
RD606060	RD606060P	600	600	600	12 U
RD606080	RD606080P	600	600	800	12 U
RD126040	RD126040P	1200	600	400	24 U
RD126050	RD126050P	1200	600	500	24 U
RD126060	RD126060P	1200	600	600	24 U
RD126080	RD126080P	1200	600	800	24 U
RD146040	RD146040P	1450	600	400	30 U
RD146050	RD146050P	1450	600	500	30 U
RD146060	RD146060P	1450	600	600	30 U
RD146080	RD146080P	1450	600	800	30 U
RD148040	RD148040P	1450	800	400	30 U
RD148050	RD148050P	1450	800	500	30 U
RD148060	RD148060P	1450	800	600	30 U
RD148080	RD148080P	1450	800	800	30 U
RD196040	RD196040P	1900	600	400	40 U
RD196050	RD196050P	1900	600	500	40 U
RD196060	RD196060P	1900	600	600	40 U
RD196080	RD196080P	1900	600	800	40 U
RD198040	RD198040P	1900	800	400	40 U
RD198050	RD198050P	1900	800	500	40 U
RD198060	RD198060P	1900	800	600	40 U
RD198080	RD198080P	1900	800	800	40 U

OUTDOOR ENCLOSURES IN DESERT AREAS
DESERT SERIES IP66



Examples



Waterproof and Auto-Refrigerated. Protect from the Solar Rays the Enclosure Inside without Increasing the Temperature

Desert enclosure has been designed to outdoor in desert areas, and/or when we need a protection inside enclosure against solar rays of this way, we reduce the inside temperature of the cabinet up to 50%.
The Desert enclosure reduces by up to 90% of direct solar radiation, lengthening and protecting the lifetime of your electronics components.
Doesn't require refrigeration, reducing the power consumption, reducing the maintenance of equipment and diminish considerably the operator's repair and spare parts costs.
Besides, its innovative design enables obtained a natural airflow in all surfaces of enclosure without additional fans.

FOR MORE INFORMATION CLICK HERE



OUTDOOR ENCLOSURES IN DESERT AREAS **DESERT SERIES** IP66

APPLICATIONS

Specially designed for outdoor desert areas with high incidence of solar light.

- Desert zones.
- Railway lines.
- Harbor areas
- Agricultural areas.



TECHNICAL FEATURES

Robust enclosure manufactured in galvanized Steel painted in 7035 or AISI 304L.
Manufactured in monobloc gives 100% sealing and maximum corrosive resistance. Suitable for harsh environments.
Designed with sunshades in all surfaces to avoid the direct solar radiation.

ADVANTAGES

- Suitable for desert areas or areas with high solar radiation.
- Protected against dust, sand and inclement weather.
- Doesn't require refrigeration nor ventilation.
- Reduces by up to 90% of direct solar radiation
- Waterproof IP66, inside is protected of dust, rain,...
- Free maintenance.

OPTIONS

- Option sun reflective treatment coating "Sunterm" for outdoor electrical enclosures.
- Possibility of two doors.
- Three materials:
  - Galvanized Steel painted in RAL 7035.
  - In AISI3L04 or AISI316L for aggressive environments.
  - Aluminum in enclosures needs more internal cooling.
- Wide range of accessories, plinth, Wall supports, roofs,...
- Custom made based on your needs.
- Door stopper.
- Safety lock, with key,...
- Thermal studies are carried out on request.

OUTDOOR ENCLOSURES IN DESERT AREAS **DESERT SERIES** IP66

DESERT LUXOR DESIGNS



DESIGN IP66
Single door enclosure





DESIGN IP66
Double door design with upright





DESIGN IP55
Double door design without upright

DELVALLE DEVELOPS ALL DIFFERENT KINDS OF MODELS TO COVER NEEDS



OUTDOOR ENCLOSURES IN DESERT AREAS **DESERT SERIES** IP66

DESERT TRIBECA DESIGNS



DESIGN IP66
Single door enclosure





DESIGN IP66
Double door design with upright





DESIGN IP55
Double door design without upright

DELVALLE DEVELOPS ALL DIFFERENT KINDS OF MODELS TO COVER NEEDS

NORMATIVE

- IP66, Norm IEC 60529-2004.
- IK10, Norm IEC 62262-2002.
- En 61969-3 Mechanical Structures for Electronic Equipment – outdoor enclosure.
- IEC 60068-2-30 and IEC 60068-2-11.
- Built to CE Standards. 2014/35/UE.
- UL approval. N° File E342220.
- Shock resistant against sharp objects EN 60439-5.
- Maximum voltage 1000 V.
- Temperatur resistant: -40°C +100°C (Short time +160°C).
- Fixing equipment DIN 41494 and IEC 297 to 19-inch rack.
- Fixing equipment IEC 917 (to ETSI or Metric 515m/m).
- Electromagnetic compatibility EMC and RFI (IP55).
- Electromagnetic protection IEC TS 61587-3 (IP55).

OUTDOOR ENCLOSURES IN DESERT AREAS **DESERT SERIES** IP66

PLAN ET REFERENCES 1 DOOR DESERT LUXOR

CLICK HERE TO DOWNLOAD
THE FILES CAD - PLANS - CERTIFICATES

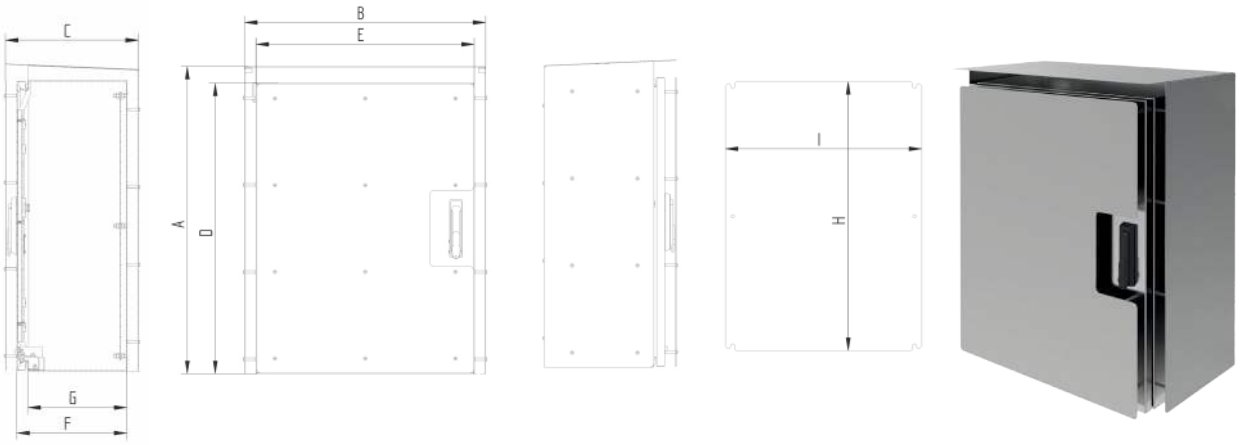

REFERENCE	DIMENSIONS (mm) OUTDOOR ENCLOSURES DESERT LUXOR IP66								
ONE DOOR DESERT LUXOR	HEIGHT -A-	WIDTH -B-	DEPTH -C-	INSIDE HEIGHT -D-	INSIDE WIDTH -E-	INSIDE DEPTH -F-	ACCESS	INSIDE USEFUL DEPTH -G-	PLAQUE MEASUREM. -HxI-
MVAB645627SOL	645	563	273	600	500	210	560x453	180	565x445
MVAB646627SOL	645	663	273	600	600	210	560x553	180	565x545
MVAB846636SOL	845	663	363	800	600	300	760x553	270	765x545
MVAB848636SOL	845	863	363	800	800	300	760x753	270	765x745
MVAB108636SOL	1045	863	363	1000	800	300	960x753	270	965x745
MVAB128636SOL	1245	863	363	1200	800	300	1160x753	270	1165x745
MVAB101036SOL	1045	1063	363	1000	1000	300	960x953	270	965x945
MVAB121036SOL	1245	1063	363	1200	1000	300	1160x953	270	1165x945
MVAB121236SOL	1245	1263	363	1200	1200	300	1160x1153	270	1165x1145
MVAB101236SOL	1045	1263	363	1000	1200	300	960x1153	270	965x1145

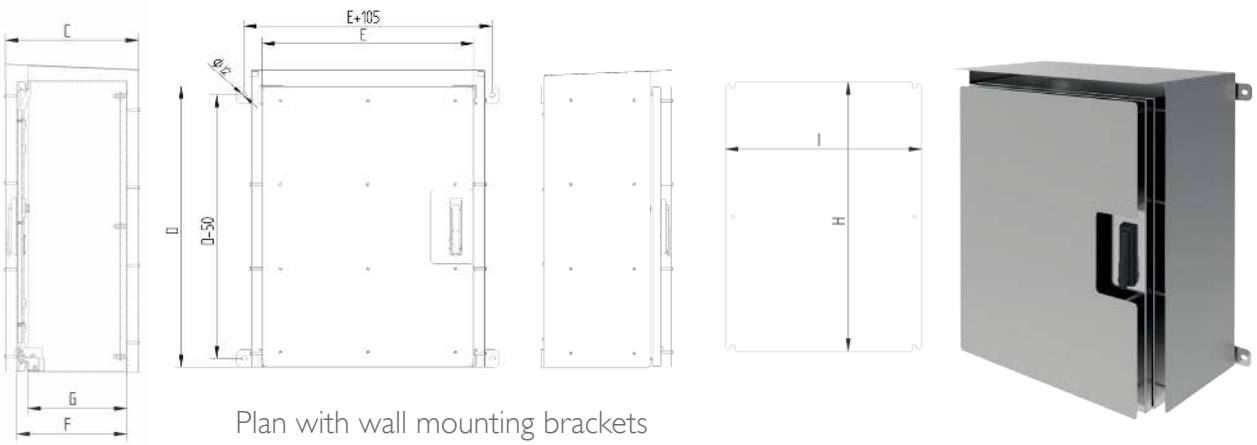

Plan with wall mounting brackets

OUTDOOR ENCLOSURES IN DESERT AREAS **DESERT SERIES** IP66



DESIGN IP55

CUSTOM
TO MEASURE

5
YEARS
MECHANICAL PARTS
GUARANTEE



DESIGN IP66

PLAN ET REFERENCES 2 DOORS DESERT LUXOR

CLICK HERE TO DOWNLOAD
THE FILES CAD - PLANS - CERTIFICATES

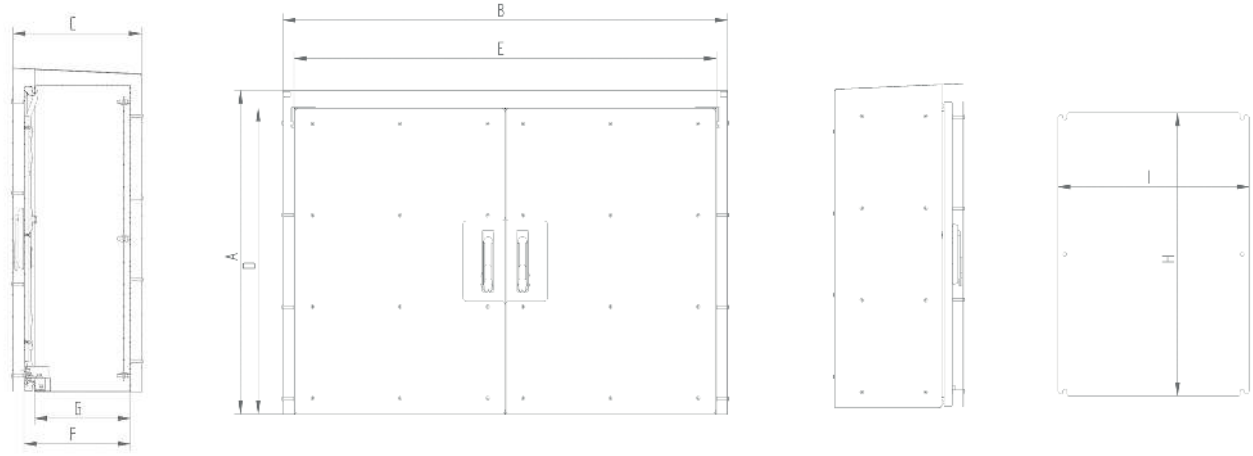

REFERENCE	DIMENSIONS (mm) OUTDOOR ENCLOSURES DESERT LUXOR IP66								
TWO DOORS DESERT LUXOR	HEIGHT -A-	WIDTH -B-	DEPTH -C-	INSIDE HEIGHT -D-	INSIDE WIDTH -E-	INSIDE DEPTH -F-	ACCESS	INSIDE USEFUL DEPTH -G-	*PLAQUES MEASUREM. -HxI-
MVAB846636DSOL	845	663	363	800	600	300	746x246	270	740x240
MVAB848636DSOL	845	863	363	800	800	300	746x346	270	740x340
MVAB108636DSOL	1045	863	363	1000	800	300	946x346	270	940x340
MVAB128636DSOL	1245	863	363	1200	800	300	1146x346	270	1140x340
MVAB101036DSOL	1045	1063	363	1000	1000	300	946x446	270	940x440
MVAB121036DSOL	1245	1063	363	1200	1000	300	1146x446	270	1140x440
MVAB121236DSOL	1245	1263	363	1200	1200	300	1146x546	270	1140x540
Opcion: IP66	Add "66" to the reference. Ex "MVAB121236DSOL66"								

* Enclosure with two plaques

OUTDOOR ENCLOSURES IN DESERT AREAS **DESERT SERIES** IP66



CUSTOM TO MEASURE

5 YEARS
MECHANICAL PARTS **GUARANTEE**



PLAN ET REFERENCES 1 DOOR DESERT TRIBECA

CLICK HERE TO DOWNLOAD THE FILES CAD - PLANS - CERTIFICATES

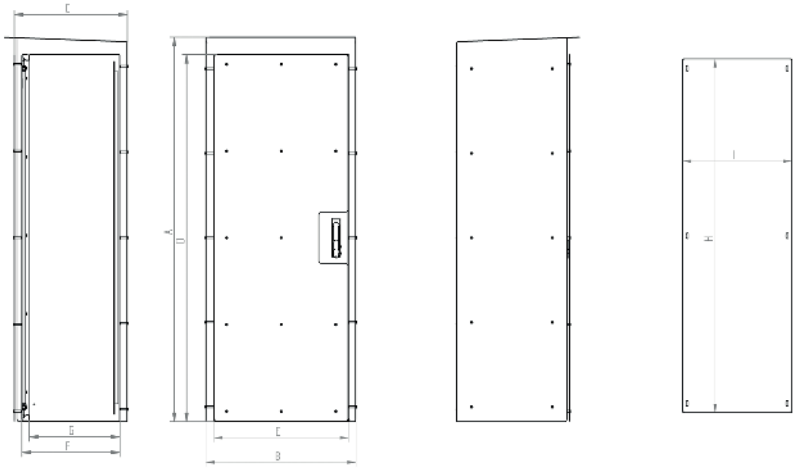

REFERENCE	DIMENSIONS (mm) OUTDOOR ENCLOSURES DESERT TRIBECA IP66								
ONE DOOR DESERT TRIBECA	HEIGHT -A-	WIDTH -B-	DEPTH -C-	INSIDE HEIGHT -D-	INSIDE WIDTH -E-	INSIDE DEPTH -F-	ACCESS	INSIDE USEFUL DEPTH -G-	PLAQUE MEASUREM. -HxI-
MVAC176646SOL	1700	663	463	1650	600	400	1540x490	375	1520x470
MVAC178646SOL	1700	863	463	1650	800	400	1540x690	375	1520x670
MVAC171046SOL	1700	1063	463	1650	1000	400	1540x890	375	1520x870
MVAC171246SOL	1700	1263	463	1650	1200	400	1540x1090	375	1520x1070
MVAC186646SOL	1850	663	463	1800	600	400	1690x490	375	1670x470
MVAC188646SOL	1850	863	463	1800	800	400	1690x690	375	1670x670
MVAC188656SOL	1850	863	563	1800	800	500	1690x690	475	1670x670
MVAC181046SOL	1850	1063	463	1800	1000	400	1690x890	375	1670x870
MVAC181056SOL	1850	1063	563	1800	1000	500	1690x890	475	1670x870
MVAC206656SOL	2050	663	563	2000	600	500	1890x490	475	1870x470
MVAC208646SOL	2050	863	463	2000	800	400	1890x690	375	1870x670
MVAC208656SOL	2050	863	563	2000	800	500	1890x690	475	1870x670
MVAC201046SOL	2050	1063	463	2000	1000	400	1890x890	375	1870x870
MVAC201056SOL	2050	1063	563	2000	1000	500	1890x890	475	1870x870

OUTDOOR ENCLOSURES IN DESERT AREAS **DESERT SERIES** IP66



DESIGN IP55

CUSTOM TO MEASURE

5 YEARS
MECHANICAL PARTS **GUARANTEE**



DESIGN IP66

PLAN ET REFERENCES 2 DOORS DESERT TRIBECA

CLICK HERE TO DOWNLOAD THE FILES CAD - PLANS - CERTIFICATES

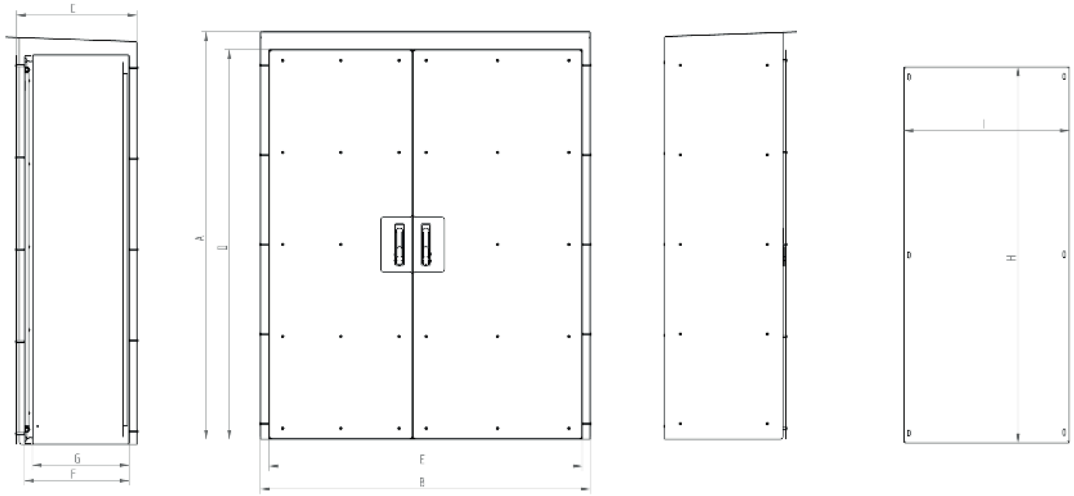

REFERENCE	DIMENSIONS (mm) OUTDOOR ENCLOSURES DESERT TRIBECA IP66								
TWO DOORS DESERT TRIBECA	HEIGHT -A-	WIDTH -B-	DEPTH -C-	INSIDE HEIGHT -D-	INSIDE WIDTH -E-	INSIDE DEPTH -F-	ACCESS	INSIDE USEFUL DEPTH -G-	*PLAQUE MEASUREM. -HxI-
MVAC181246SOL	1850	1263	463	1800	1200	400	1690x490	375	1670x470
MVAC181256SOL	1850	1263	563	1800	1200	500	1690x490	475	1670x470
MVAC201246SOL	2050	1263	463	2000	1200	400	1890x490	375	1870x470
MVAC201256SOL	2050	1263	563	2000	1200	500	1890x490	475	1870x470
MVAC201446SOL	2050	1463	463	2000	1400	400	1890x590	375	1870x570
MVAC201456SOL	2050	1463	563	2000	1400	500	1890x590	475	1870x570
MVAC201646SOL	2050	1663	463	2000	1600	400	1890x690	375	1870x670
MVAC201656SOL	2050	1663	563	2000	1600	500	1890x690	475	1870x670
Opcion: IP66	Add "66" to the reference. Ex "MVAC201656SOL66"								

* Enclosure with two plaques

OUTDOOR RACK WITH DOUBLE WALL
TORNADO SERIES IP66



Example

Large Space Inside for Rack Equipments

Stainless steel cabinet Tornado Series with or without 19" or 21" rack system, especially designed for outdoor use: thermo-insulated and self-cooling double wall for better protection of the electronics, servers, CCTV, telecommunications, voice, data, fibre optics,... Ideal for protecting electronic equipment against temperature change. The interior design allows easy placement of racks, mounting plates, trays, dividers,...
Equipped with a removable tray for easy cable entry and hole cutting. Includes socket 100 mm, 19 " frame rack and anti-vandalism handle made resistant to corrosion and weathering.

FOR MORE INFORMATION CLICK HERE



OUTDOOR RACK WITH DOUBLE WALL **TORNADO SERIES** IP66

APPLICATIONS

Ideal for outdoor computer placement, weather stations, telecommunications, CTV, ETSI, fibre optics, security and video surveillance, traffic light controls, street lighting or any other application that needs extra outdoor protection.
For outdoor use in areas experiencing extreme temperatures or harsh environments. External placement:

- Areas with extreme temperatures or hostile environments.
- Desert areas, tropical, high mountain.

TECHNICAL FEATURES

- Material: stainless steel, aluminium or galvanized.
- Available with 1 or 2 doors.
- Height: from 1185 mm to 1585 mm (other sizes on request).
- Width: 600 mm and 800 mm. (other sizes on request).
- Depth: 600 mm and 800 mm (other sizes on request).
- Rack height: : 20 U, 25 U, 30 U, 35 U and 40 U.
- Sealing: from IP43 to IP66.
- Packing unit: 1.
- Front door: metal with anti-vandalism handle.
- Cable entry: from below.

ADVANTAGES

- The best system of telecommunication rack cabinets on the market.
- Earthquake and vibration control.
- Thermo insulated and self-cooled.
- Approved water resistant sealing and UL certified, on exterior doors.
- Maximum security against vandalism and lever forced opening.
- Anti-vandalism socket.
- Maximum insulation capacity.
- Especially designed for telecomunications, telephone, fibre optics and public lighting.
- Double thermal proof walls.
- Highly resistant to vandalism.

MATERIALS

- Stainless steel outdoor rack, corrision resistant C5H.
- Aluminium outdoor rack, improves cooling and is lighter (2 mm).
- Galvanized outdoor rack, a cheaper alternative.

OPTIONS

- Delvalle can design a specific solution to the client's requirements while retaining thefundamentals of thermal insulation, sealing, safety and easy installation.
- Material: stainless steel, aluminium or galvanized.
- 19" or 21", depending on rack support position.
- Several options in roof ventilation.
- 200 mm plinth at base.
- Possibility of including air conditioning equipment attached to one side or the roof.
- Can also be suppled without a frame rack but with trays.
- Handle with lock.ing system.
- Full range of accessories available.
- The tray can includes micro cuts for later placement of different options.

OPTION SUN REFLECTIVE TREATMENT COATING "SUNTERM" FOR OUTDOOR ELECTRICAL ENCLOSURES

SunTerm

SunTerm treatment coating for use in outdoor electrical enclosures, contain a reflective component that deflects the infrared light, and thus the half of the sun's total energy, from any substrate that it coats. As a result, the surface of the substrate, and any interior ambient that it protect, are cooler than a standard coating.

As a treatment solution SunTerm also gives you high corrosion resistant for outdoor environments.

Temperature outdoor resistant -40°C +80 °C.

Test under lab controlled conditions showed that the aluminum substrate being coated with SunTerm is 7°C cooler than coated with standard coating inside.

AIR MOVEMENT INSIDE THE CABINET

- Standard front ventilation cabinet

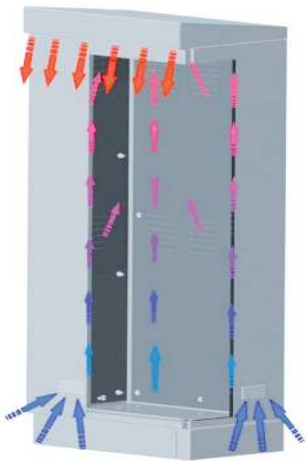

- Cabinet with extra ventilation (front and back)

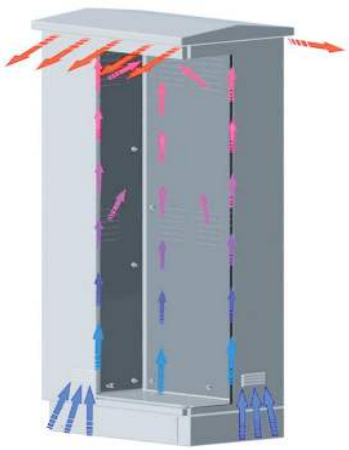

- Cabinet with extra ventilation (four sides)

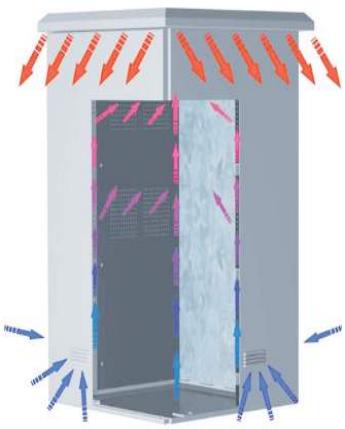

OUTDOOR RACK WITH DOUBLE WALL **TORNADO SERIES** IP66

OUTDOOR FINISH ANTIPOSTER

Outdoor cabinet antiposter, specially designed for public lighting, urban furniture, city hall, shopping centers, buildings...

Its design with rumble strips prevents the sticking of posters. It is also aesthetically more elegant

Available in two materials: aluminium and galvanized steel with epoxy - polyester paint.



Example

ACCESORIES

- Rack suport



The design of our cabinet means 19" or 21"profiles can be fitted inside as well as the desired components.

- Fan



Placing a fan at the top of the cabinet brings a continuous flow of air inside.

- Sockets



The anti-vandalism socket, especially designed for this model, prevents access to the cabinet and robbery.

- Diffusers

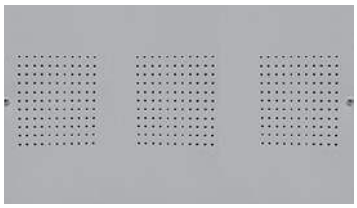

For a perfectly controlled circulation of air inside, both walls and doors incorporate diffusers.

- Roof



With three models of roof we cover all needs to achieve air evacuation, from a simple front, front and rear and finally one from all four sides.

- Brackets



Simple side brackets, coupled with an anti-insect screen, allows the entry of air and prevents the passage of anything larger than 1mm²

TR01 AC01	Ventilation Kit	MVRACM	Heaters (Up to 2000 W). Contact us for further information.
MVSR	Trays	CONSULTAR	Canopies with extra ventilation
MVRT01	Door stop	TROPICO SERIES	Air-conditioning (recommended to obtain a constant temperature)

OUTDOOR RACK WITH DOUBLE WALL **TORNADO SERIES** IP66

VENTILATION KIT

REFERENCE	TR01 AC01

After studying the requirements that our customers demand in ventilation issues, Delvalle includes a kit of accessories consisting of the following elements:

- Roof fan



- Resistance heating



- Dual thermostat



NORMS

- From IP43 to IP66 . Norm IEC EN 62208 and EN 60529/10.91.
  - IP43 with ventilation brackets
  - IP54 with vent grille
  - IP66 without ventilation
- 2014/35/UEEN 50102
- Maximum voltage 1000 V
- UL Nema 4x, 12, 1, 3r by request. N° File E342220.
- Several options in roof ventilation 200 mm plinth at base.
- EN61969-3 Mechanical structures for electronic equipment and outdoor enclosures.
- Possibility of including air conditioning equipment attached to one side or the roof.
- Can also be suppled without a frame rack but with trays.
- Handle with lock.ing system. Available with 1 or 2 doors.
- The tray can includes micro cuts for later placement of different options.

10 YEARS
STAINLESS ANTICORROSIVE **GUARANTEE**

5 YEARS
MECHANICAL PARTS **GUARANTEE**

Phone +34 945 601 381
comercial@delvalle.es | www.delvallebox.com

OUTDOOR RACK WITH DOUBLE WALL **TORNADO SERIES** IP66

PLAN AND REFERENCES 1 DOOR

CLICK HERE TO DOWNLOAD
THE FILES CAD - PLANS - CERTIFICATES

FRONT VIEW

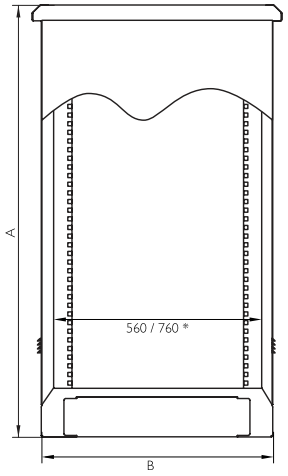

SIDE VIEW

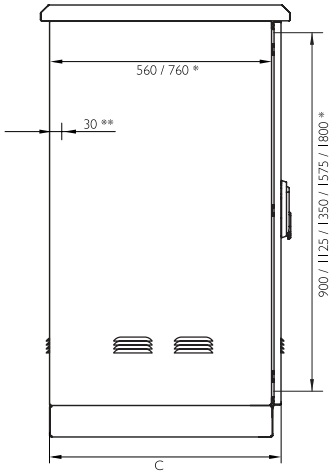

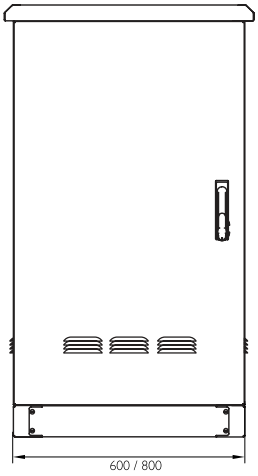

*Internal dimensions

**Internal dimensions for two door cabinets

REFERENCES - MATERIALS			DIMENSIONS (mm)						
STAINLESS STEEL	ALUMINIUM	GALVANIZED	DESCRIPTION	HEIGHT (A)	WIDTH (B)	DEPTH (C)	DOUBLE DOOR MACHINABLE AREA	LATERAL MACHINABLE AREA	PLATE MEASURES
TR116080	TRAL116080	TRG116080	TORNADO 20 U	1185	600	800	905x430	925x715	965x530
TR116060	TRAL116060	TRG116060	TORNADO 20 U	1185	600	600	905x430	925x515	965x530
TR118080	TRAL118080	TRG118080	TORNADO 20 U	1185	800	800	905x630	925x715	965x730
TR118060	TRAL118060	TRG118060	TORNADO 20 U	1185	800	600	905x630	925x515	965x730
TR136080	TRAL136080	TRG136080	TORNADO 25 U	1385	600	800	1105x430	1125x715	1165x530
TR136060	TRAL136060	TRG136060	TORNADO 25 U	1385	600	600	1105x430	1125x515	1165x530
TR138080	TRAL138080	TRG138080	TORNADO 25 U	1385	800	800	1105x630	1125x715	1165x730
TR138060	TRAL138060	TRG138060	TORNADO 25 U	1385	800	600	1105x630	1125x515	1165x730
TR156080	TRAL156080	TRG156080	TORNADO 30 U	1585	600	800	1305x430	1325x715	1165x730
TR156060	TRAL156060	TRG156060	TORNADO 30 U	1585	600	600	1305x430	1325x515	1165x730
TR158080	TRAL158080	TRG158080	TORNADO 30 U	1585	800	800	1305x630	1325x715	1365x530
TR158060	TRAL158060	TRG158060	TORNADO 30 U	1585	800	600	1305x630	1325x515	1365x530
TR186080	TRAL186080	TRG186080	TORNADO 35 U	1885	600	800	1555x430	1575x715	1615x530
TR186060	TRAL186060	TRG186060	TORNADO 35 U	1885	600	600	1555x430	1575x515	1615x530
TR188080	TRAL188080	TRG188080	TORNADO 35 U	1885	800	800	1555x630	1575x715	1615x730
TR188060	TRAL188060	TRG188060	TORNADO 35 U	1885	800	600	1555x630	1575x515	1615x730
TR206080	TRAL206080	TRG206080	TORNADO 40 U	2060	600	800	1780x430	1800x715	1840x530
TR206060	TRAL206060	TRG206060	TORNADO 40 U	2060	600	600	1780x430	1800x515	1840x530
TR208080	TRAL208080	TRG208080	TORNADO 40 U	2060	800	800	1780x630	1800x715	1840x730
TR208060	TRAL208060	TRG208060	TORNADO 40 U	2060	800	600	1780x630	1800x515	1840x730
Version Norme UL			Add "UL" to reference. Ex: "TR208080UL"						
Version Rear Door			Add code letter P to reference. Ex: "TR208080P"						

Separation depth plate 20mm

OUTDOOR RACK WITH DOUBLE WALL **TORNADO SERIES** IP66

PLAN AND REFERENCES 2 DOORS

CLICK HERE TO DOWNLOAD
THE FILES CAD - PLANS - CERTIFICATES

SIDE VIEW

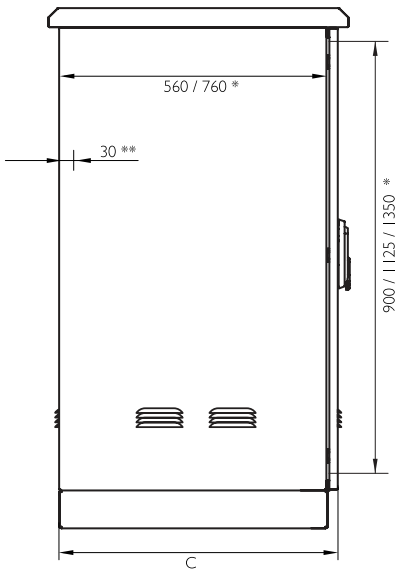

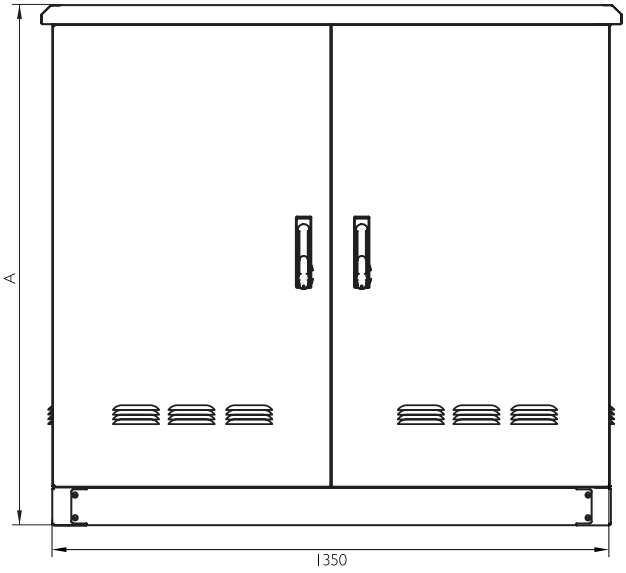

REFERENCES - MATERIALS			DIMENSIONS (mm)			
STAINLESS STEEL	ALUMINIUM	GALVANIZED	DESCRIPTION	HEIGHT (A)	WIDTH (B)	DEPTH (C)
TR111380D	TRAL111380D	TRG111380D	TORNADO 20 U	1160	1350	800
TR111360D	TRAL111360D	TRG111360D	TORNADO 20 U	1160	1350	600
TR131380D	TRAL131380D	TRG131380D	TORNADO 25 U	1385	1350	800
TR131360D	TRAL131360D	TRG131360D	TORNADO 25 U	1385	1350	600
TR161380D	TRAL161380D	TRG161380D	TORNADO 30 U	1610	1350	800
TR161360D	TRAL161360D	TRG161360D	TORNADO 30 U	1610	1350	600
TR181380D	TRAL181380D	TRG181380D	TORNADO 35 U	1835	1350	800
TR181360D	TRAL181360D	TRG181360D	TORNADO 35 U	1835	1350	600
Version Norme UL			Add "UL" to reference. Ex: "TR208080UL"			

* Standard dimensions (any rack can be custom made to meet needs)



OUTDOOR ENCLOSURE **TROPICO SERIES** IP66



Example

Water Repellent Injected Seal

The Tropico Series enclosure for outdoor and street lighting made of stainless AISI 304L or galvanized and painted steel.
Robust, developed and designed for outdoor, use with an embedded door, triple action above all rotation anti-vandalism handle and waterproof seal approved CE, UL.
Achieves a sealing IP66, and the maximum possible resistance IK10.
Attached selfventilating roof and optional plinth together with embedded door make it vandal proof.

FOR MORE INFORMATION CLICK HERE



OUTDOOR ENCLOSURE TROPICO SERIES IP66

APPLICATIONS

Our outdoor Tropico Series enclosures, have a design, finishing and sealing especially for telecommunications, street lighting, railway lines to hold and protect all electrical and electronic equipment, in the rail sector, urban city cabinets and telecommunications (ICT), TV, RDSI, RT, TB, TLCA.



OPTIONS

- Varying design and painting available on request.
- Plinths at base for enclosures of any size. They allow enclosures to stand above the floor, with extra room for cable entry. Available as 100mm (standard) and 200mm high.
- Manufactured in stainless steel AISI 316L, EN 1.4404.
- Fasteners and widthrs for ground fixing.
- Graffiti-proof protective paint
- Insulating mounting plate (bakelite) or in stainless steel.
- EMC version according to 2014/30/UE of electromagnetic compatibility.

ADVANTAGES

- Excellent mechanical properties and high resistance too.
- Water repellent injected seal.
- Automatic condensation evacuation.
- The enclosure includes anti-vandalism locks and handles, adapted for electric and gas company locking systems.
- Maintenance free for life, over 30 years.
- Delvalle makes to order any pre-cut units for your needs, including holes, channels, both in the door and in the enclosure itself.



OUTDOOR ENCLOSURE **TROPICO SERIES** IP66

OPTION SUN REFLECTIVE TREATMENT COATING "SUNTERM" FOR OUTDOOR ELECTRICAL ENCLOSURES

SunTerm treatment coating for use in outdoor electrical enclosures, contain a reflective component that deflects the infrared light, and thus the half of the sun's total energy, from any substrate that it coats.

As a result, the surface of the substrate, and any interior ambient that it protect, are cooler than a standard coating.

As a treatment solution SunTerm also gives you high corrosion resistant for outdoor environments.

Temperature Outdoor Resistant -40°C +80 °C.

Test under lab controlled conditions showed that the aluminum substrate being coated with SunTerm is 7oC cooler than coated with standard coating inside.

PLACEMENT OF OUTDOOR CABINETS

As can be seen in the picture, as an option, the plinth allows it to be fully fixed to ground movements so avoiding.



Detail of plinths with mounting frame



Detail of inclined plinths with mounting frame

OUTDOOR FINISH ANTIPOSTER

Outdoor cabinet antiposter, specially designed for public lighting, urban furniture, city hall, shopping centers, buildings...

Its design with rumble strips prevents the sticking of posters. It is also aesthetically more elegant

Available in two materials: aluminium and galvanized steel with epoxy - polyester paint.



Example

OUTDOOR ENCLOSURE TROPICO SERIES IP66

DESIGNS



BASIC DESIGN
Single door cabinet with hood, plinths and vents.
Especially designed for: public lighting, advertising panels, festivals, christmas lights, and traffic light controls.



2 DOOR DESIGN
Double door design up to IP65, anti-vandal lock and plinths (300 mm).
Perfect for connection, measurement, controls and protection modules.



3 DOOR DESIGN
Triple door design up to IP65, with anti-vandal locking, side screens and plinths (300 mm). Ideal for connection, measurement, controls and protection modules.



DELVALLE DEVELOPS ALL DIFFERENT KINDS OF MODELS TO COVER NEEDS, VARYING IN SIZE AND IN THE NUMBER OF DOORS, BOTH FRONT AND SIDE

VENTILATION KIT

REFERENCE	TR01 AC01

After studying the requirements that our customers demand in ventilation issues, Delvalle includes a kit of accessories consisting of the following elements:

- Roof fan



- Resistance heating



- Dual thermostat



OUTDOOR ENCLOSURE **TROPICO SERIES** IP66

NORMATIVE

- IP66 Norm EN 62208 and EN 60529.
- Maximum IK10 hit resistance Norm IEC 62262.
- IEC 60068-2-30 and IEC 60068-2-11.
- Built to CE standard 2014/35/UE.UL Nema 4x, 12, 1, 3r by request. N°File E342220.
- Resistant to impact sharp objects according to EN 60439-5.
- Maximum voltage 1000 V.
- Temperature resistant: -40°C +100°C (short time +160°C).
- Option silicone gasket: from -60°C to +180°C (short time up to +350°C).

10 YEARS
STAINLESS ANTICORROSIVE **GUARANTEE**

5 YEARS
MECHANICAL PARTS **GUARANTEE**

PLAN

CLICK HERE TO DOWNLOAD
THE FILES CAD - PLANS - CERTIFICATES

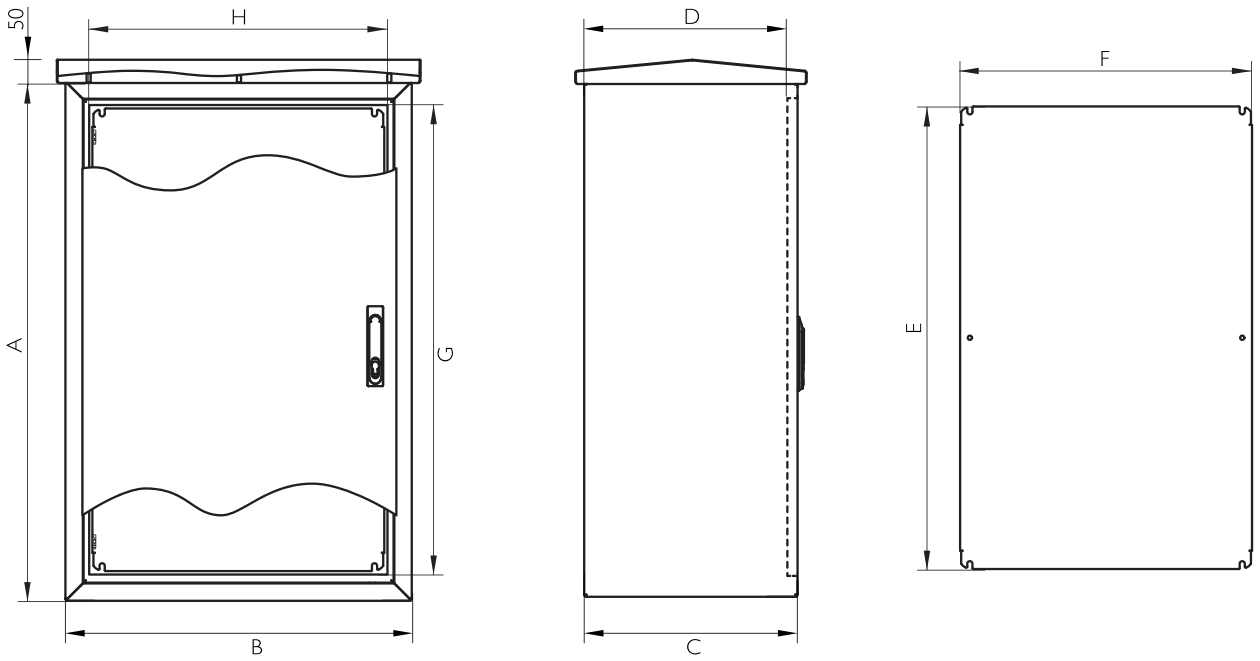

OUTDOOR ENCLOSURE TROPICO SERIES IP66

REFERENCES

REFERENCES	DIMENSIONS (mm)								
REFERENCE	HEIGHT -A-	WIDTH -B-	DEPTH -C-	ACCESS -GxH-	INSIDE DEPTH -D-	MACHINABLE AREA		PLAQUE MEASUREM. -ExF-	DOORS NUMBER
						DOOR	LATERAL		
MVAD106032	1000	600	320	883x483	297,5	858.5x412.8	990x310	870x475	1
MVAD106040	1000	600	400	883x483	377,5	858.5x412.8	990x390	870x475	1
MVAD106050	1000	600	500	883x483	477,5	858.5x412.8	990x490	870x475	1
MVAD126032	1200	600	320	1083x483	297,5	1058.8x412.8	1190x310	1070x475	1
MVAD126040	1200	600	400	1083x483	377,5	1058.8x412.8	1190x390	1070x475	1
MVAD126050	1200	600	500	1083x483	477,5	1058.8x412.8	1190x490	1070x475	1
MVAD108032	1000	800	320	883x683	297,5	800x530	990x310	870x675	1
MVAD108040	1000	800	400	883x683	377,5	800x530	990x390	870x675	1
MVAD108050	1000	800	500	883x683	477,5	800x530	990x490	870x675	1
MVAD128032	1200	800	320	1083x683	297,5	1000x530	1190x310	1070x675	1
MVAD128040	1200	800	400	1083x683	377,5	1000x530	1190x390	1070x675	1
MVAD128050	1200	800	500	1083x683	477,5	1000x530	1190x490	1070x675	1
MVAD121032	1200	1000	320	1083x683	297,5	1058.5x322.3 y 1058.5x255.8	1190x310	1070x870	2
MVAD121040	1200	1000	400	1083x683	377,5	1058.5x322.3 y 1058.5x255.8	1190x390	1070x870	2
MVAD121050	1200	1000	500	1083x683	477,5	1058.5x322.3 y 1058.5x255.8	1190x490	1070x870	2
MVAD101232	1000	1200	320	883x1083	297,5	858.5x522.3 y 858.5x455.8	990x310	870x1070	2
MVAD101240	1000	1200	400	883x1083	377,5	858.5x522.3 y 858.5x455.8	990x390	870x1070	2
MVAD101250	1000	1200	500	883x1083	477,5	858.5x522.3 y 858.5x455.8	990x490	870x1070	2
MVAD801432	800	1400	320	683x1283	297,5	658.5x722.3 y 658.5x655.8	790x310	670x1270	2
MVAD101432	1000	1400	320	883x1283	297,5	858.5x722.3 y 858.5x655.8	990x310	870x1270	2
MVAD101440	1000	1400	400	883x1283	377,5	858.5x722.3 y 858.5x655.8	990x390	870x1270	2
MVAD101450	1000	1400	500	883x1283	477,5	858.5x722.3 y 858.5x655.8	990x490	870x1270	2
MVAD121432	1200	1400	320	1083x1283	297,5	1058.5x722.3 y 1058.5x655.8	1190x310	1070x1270	2
MVAD121440	1200	1400	400	1083x1283	377,5	1058.5x722.3 y 1058.5x655.8	1190x390	1070x1270	2
MVAD121450	1200	1400	500	1083x1283	477,5	1058.5x722.3 y 1058.5x655.8	1190x490	1070x1270	2
MVAD141432	1400	1400	320	1283x1283	297,5	1258.5x722.3 y 1258.5x655.8	1390x310	1270x1270	2
MVAD141440	1400	1400	400	1283x1283	377,5	1258.5x722.3 y 1258.5x655.8	1390x390	1270x1270	2
MVAD141450	1400	1400	500	1283x1283	477,5	1258.5x722.3 y 1258.5x655.8	1390x490	1270x1270	2
MVAD121632	1200	1600	320	1083x1483	297,5	1000x570	1190x310	1070x1470	2
MVAD121640	1200	1600	400	1083x1483	377,5	1000x570	1190x390	1070x1470	2
MVAD121650	1200	1600	500	1083x1483	477,5	1000x570	1190x490	1070x1470	2
MVAD161832	1600	1800	320	1483x1883	297,5	1458.5x438.1	1590x310	1470x1670	3
MVAD161840	1600	1800	400	1483x1883	377,5	1458.5x438.1	1590x390	1470x1670	3
MVAD161850	1600	1800	500	1483x1883	477,5	1458.5x438.1	1590x490	1470x1670	3
MVAD162050	1600	2000	500	1483x1883	477,5	1458.5x504.8	1590x490	1470x1870	3
MVAD182050	1800	2000	500	1683x1883	477,5	1658.5x504.8	1790x490	1670x1870	3
MVAD222050	2200	2000	500	2083x1883	477,5	2058.5x504.8	2190x490	2070x1870	3
MVAD122232	1200	2200	320	1083x2083	297,5	1058.5x571.4	1190x310	1070x2070	3
MVAD122240	1200	2200	400	1083x2083	377,5	1058.5x571.4	1190x390	1070x2070	3
MVAD122250	1200	2200	500	1083x2083	477,5	1058.5x571.4	1190x490	1070x2070	3
MVAD182450	1800	2400	500	1683x2283	477,5	1600x555.3	1790x490	1670x2270	3
MVAD202450	2000	2400	500	1883x2283	477,5	1800x555.3	1990x490	1870x2270	3

Separation depth plate 30mm

STAINLESS STEEL SOS POST IP66



CUSTOM
TO MEASURE



SOS post 3 modules

The Main Goal of the SOS Postis to Provide a Security Team in an Emergency

The SOS Post consist an emergency station aimed at users and the tunnel's staff, which allows to notify and communicate about any incident happened.
The main goal of the SOS Post is to provide a security team in an emergency, by means of the provision of an emergency telephone and alarm button to allow bidirectional verbal communication between the user and the surveillance staff of the control center. The emergency station should be equipped minimally with an emergency telephone and two fire extinguishers.

FOR MORE INFORMATION CLICK HERE

APPLICATIONS

The SOS Post consist an emergency station aimed at users and the tunnel's staff, which allows to notify and communicate about any incident happened.

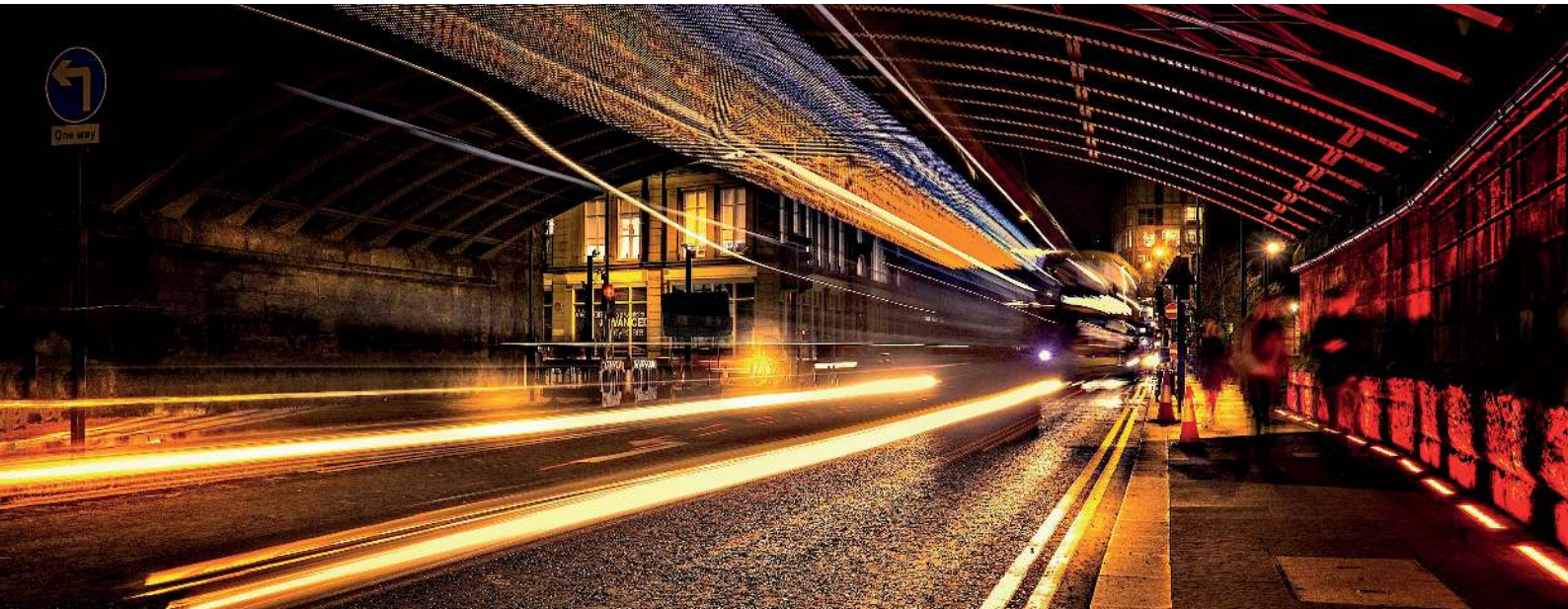

STAINLESS STEEL SOS POST IP66

FEATURES

- The SOS Post is an emergency station which include a minimum security equipment:
  - 1 emergency telephone
  - 2 fire extinguishers
- The SOS Post are installed inside the tunnel, in a specific and safety cells, housed the tunnel's wall. Normally, they are separated every 60 m, in alternative way. Also, they should be located in outsides areas, close to the accesses.
- The equipment will be powered to the electrical network 230 V at 60 Hz, with the corresponding protection equipment. In addition, the cabinet will have an auxiliary power supply.



TWO MODULES DESIGN

This model consists in an electric cabinet with 2 independent doors.

- 1 SSA cabinet with double BIT closure, designed for the storage of electronic equipment that allows operation of the emergency station. Access to authorized personnel is only allowed (maintenance personnel and montrol menter staff).
- 1 SOS cabinet with double wing close, which allows users to use the security team in an emergency. There is a minimum security equipment. The SOS cabinet has a transparent glass door to permit visibility of the safety equipment.

OPTIONS

- Manufactured in stainless steel AISI 316L EN 14404.
- Option painted galvanized steel finish in RAL 7035 or another color.
- Possibility of realization of two or three modules.

NORMATIVE

- Directive 2004/54/EC safety requirements for tunnels in the Trans-European Road
- IEC EN 62208 and EN 60529. IP66 (IP55 double door without mounting, IP66 with central welded bar mounting).
- DIN 40050-9 - IP69K extiend IEC 60529.
- Manufactured following EU low voltage ruling 2014/35/UE.
- Normative IEC 62208 and EN 62262. IK10 resistance.
- Certificate UL Nema 4x, 12, 3r, 1. N° File E342220.

THREE MODULES DESIGN

This model consists in an electric cabinet with 3 independent doors.

- 1 SSA cabinet with double BIT closure, designed for the storage of electronic equipment that allows operation of the emergency station. Access to authorized personnel is only allowed (maintenance personnel and control center staff). It's a roomy cabinet to storage equipment to guarantee perfect and fast communication with the staff in an emergency.
- 2 independent SOS cabinets, both with a wing lock. The first cabinet allows the service of communication with the personnel of the control center. The second cabinet gives the extinguishing equipment.

STAINLESS STEEL SOS POST IP66

PLAN AND REFERENCES TWO MODULES

CLICK HERE TO DOWNLOAD
THE FILES CAD - PLANS - CERTIFICATES





REFERENCES	DIMENSIONS (mm)		
SOS POST 2 MODULES	HIGH - A -	WIDTH - B -	DEPTH - C -
MVAB907537DSOS	900	750	370
Version: Normative UL	Add "UL" to the reference. Ex: "MVAB907537DSOSUL"		
Version: Stainless AISI 316L	Add "S6" to the reference. Ex: "MVAB907537DSOSS6"		
Version: Galvanized	Replace "MVAB" by "MVGB" Ex. "MVGB907537DSOS"		

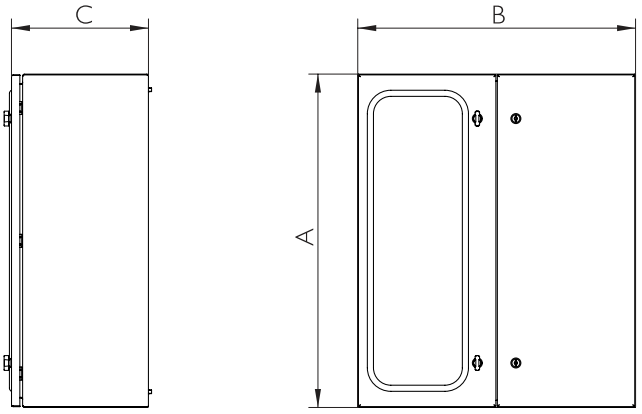

PLAN AND REFERENCES THREE MODULES

REFERENCES	DIMENSIONS (mm)		
SOS POST 3 MODULES	HIGH - A -	WIDTH - B -	DEPTH - C -
MVAB801537.3PSOS	800	1500	370
MVAB901537.3PSOS	900	1500	370
MVAB101537.3PSOS	1000	1500	370
Version: Normative UL	Add "UL" to the reference. Ex: "MVAB907537DSOSUL"		
Version: Stainless AISI 316L	Add "S6" to the reference. Ex: "MVAB907537DSOSS6"		
Version: Galvanized	Replace "MVAB" by "MVGB" Ex. "MVGB907537DSOS"		



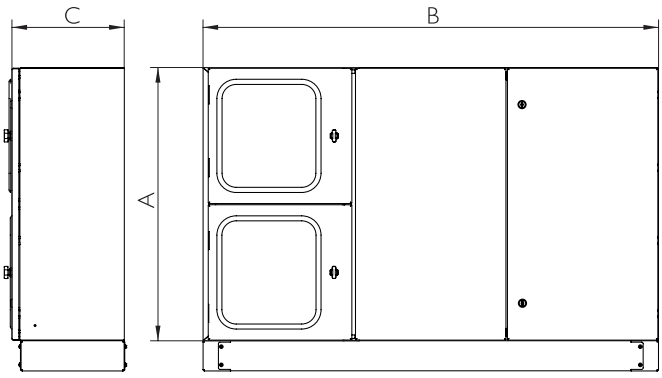



ANTI-POSTER OUTDOOR ENCLOSURE IP66



Examples



Anti-Poster Solution

Outdoor cabinet antiposter, specially designed for public lighting, urban furniture, city hall, shopping centers, buildings...
Its design with rumble strips prevents the sticking of posters. It is also aesthetically more elegant.

APPLICATIONS

- Electrical enclosure outdoor design.
- Urban furniture for city Hall, malls, buildings...

ADVANTAGES

- The cabinet includes security lock, which prevents forced openings, suitable for semi-cylindrical profile closures, electric company, gas keys,...
- Delvalle makes any measure that suits your needs, including holes, channels, shapes, paint,... upon request.
- Anti-graffiti treatment.

OPTIONS

Available in two materials: aluminium and galvanized steel with epoxy-polyester paint.

NORMATIVE

- IP66 Norm EN 62208 and EN 60529.
- Maximum IK10 hit resistance Norm IEC 62262.
- UL Nema 4x, 12, 1, 3r by request. N° File E342220.

FOR MORE INFORMATION CLICK HERE

CUSTOMIZED ENCLOSURE SOLUTIONS DELVALLE

Delvalle has more than 50 years of experience using the latest technology to implement and obtain the most innovative products on offer to all our customers. Delvalle is an ideal partner, combining an advanced and wide range of products at very competitive prices.

The customized manufacture of all electrical enclosures and cabinets Delvallebox is carry out with the most advanced technical methods and with the precision and consciousness of a craftsman. This makes the difference from competitors and is the best way to gain our customers´ trust.
In Delvallebox we bear in mind that customers perceive the quality very clearly. In every product (for instance, in the cabinets here presented) safety and useful solutions are what customers value most.



STAINLESS STEEL INDUSTRIAL ENCLOSURES



OUTDOOR ELECTRICAL ENCLOSURES



GLOBAL ELECTRICAL SOLUTIONS FOR URBAN AREAS



GALVANIZED STEEL ELECTRICAL ENCLOSURES

Phone +34 945 601 381
comercial@delvalle.es | www.delvallebox.com



SLOPED ROOF
ENCLOSURES - HYGIENIC

ATEX INDUSTRIAL ENCLOSURES



INDUSTRIAL ENCLOSURES IP66, IP67, IP68 AND IP69K

Buy direct from manufacturer of custom made IP66, IP67, IP68 and IP69K heavy duty industrial and waterproof electrical enclosures AISI 304L and 316L made by standard IEC 60529. Delvalle has tested all sizes and dimensions of waterproof enclosures according to EN 60529:2018. All weather resistant enclosures are more than simply rainproof, they meet a minimum of Nema 4X and IP66, IP67, IP68 and IP69k requirements to ensure your electronics are protected. From Juntion boxes to industrial enclosures, Delvalle weatherproof enclosures offer a wide range of sizes and styles to keep your project waterproof.





CABLE GLANDS FOR
ELECTRICAL ENCLOSURES

CLIMATE CONTROL
COOLING FOR ENCLOSURES



delvalle®

INDUSTRIAL ENCLOSURE SOLUTIONS



Paso del Prao, 6. 01320 Oyón (Álava). Spain
Phone +34 945 601 381
comercial@delvalle.es | **www.delvallebox.com**

Contact us, we will be available at any time