·WE ARE·
MANUFACTURERS
CERTIFIED

delvalle®
INDUSTRIAL ENCLOSURE SOLUTIONS

SOLUTIONS IP6K9K DELVALLE

ELECTRICAL BOXES
WITH PROTECTION IP6K9K





comercial@delvalle.es | www.delvallebox.com

ELECTRICAL BOXES AND ENCLOSURES ISO 20653 - IP6K9K	4
FRESH DESIGN ENCLOSURES & BOXES	6
JUCTION BOX - FRESH GEO SERIES IP6K9K	7
ELECTRICAL ENCLOSURES - FRESH TRIBECA SERIES IP6K9K	9
ELECTRICAL ENCLOSURES - FRESH LUXOR SERIES IP6K9K	12
HYGIENIC DESIGN ENCLOSURES & BOXES	14
ELECTRICAL ENCLOSURES - HYGIENIC LUXOR SERIES IP6K9K	15
JUCTION BOX - HYGIENIC GEO SERIE IP6K9K	18
ELECTRICAL ENCLOSURES - SERIE HYGIENIC TRIBECA SERIES IP6K9K	20
STAINLESS STEEL ENCLOCSURES & CABLE GLANDS	23
STAINLESS STEEL WALL MOUNTED ENCLOSURES - LUXOR SERIES IP6K9K	24
STAINLESS STEEL FREE-STANDING ENCLOSURE - TRIBECA SERIES IP6K9K	28
MODULAR STAINLESS STEEL ENCLOSURE - TITAN SERIES IP6K9K	32
PUSH-BUTTON AND JUNCTION STAINLESS STEEL BOX - GEO SERIES IP6K9K	36
STAINLESS STEEL CONSOLE - RIVIERA SERIES IP6K9K	39
METRIC STAINLESS STEEL CABLE GLANDS - HYGIENIC SERIES IP69K	42
METRIC STAINLESS STEEL AND NICKEL PLATED CABLE GLANDS IP69K	43

Paso del Prao, 6. 01320 Oyón (Álava). Spain
Phone +34 945 601 381
comercial@delvalle.es | **www.delvallebox.com**



WE PUT AT YOUR DISPOSAL

We offer over **50 years** providing solutions to demanding customers who require very specific characteristics and behaviour according to the sector and their needs.

WHEREVER YOU GO

We are committed to working closely with our customers, providing them with **exceptional service** and offering an advanced and extensive range of products with very competitive prices.

HIGH STANDARD OF QUALITY AND SERVICES

We only use materials provided by companies who offer the very **highest quality**, suitable and certified products. Our success is due to top quality assurance: ISO 9001, SGS, UL, TÜV, ISO 14000 and ISO45001.

CUSTOMIZE TOTALLY YOUR ENCLOSURE

Our production systems can give custom-made solutions **on demand.** Every colour from RAL chart is available to be personalized. A variety of protection standards thanks to our own painting facilities.

EU

100%
Diseñado y fabricado íntegramente en España
Entirely designed and manufactures in Spain

CONTACT US

Confidentiality, reliability & quality

www.delvallebox.com
comercial@delvalle.es
+34 945 601 381

ALSO ONLINE

Please contact our technical sales department

A team of professionals with high experience and ability to solve all your queries



ELECTRICAL BOXES AND ENCLOSURES ISO 20653 - IP6K9K

We manufacturer custom made heavy duty waterproof electrical enclosures IP6K9K by standard ISO 20653

The first digit indicates the level of protection that the enclosure provides against access to hazardous parts (e.g., electrical conductors, moving parts) and the ingress of solid foreign objects. The second digit indicates the level of protection that the enclosure provides against harmful ingress of water.

SOLID PARTICLE PROTECTION		LIQUID INGRESS PROTECTION	
IP	DESCRIPTION	IP	DESCRIPTION
0	No protection against contact and ingress of objects	0	No protection against water
1	Any large surface of the body, such as the back of a hand, but no protection against deliberate contact with a body part	1	Dripping water (vertically falling drops) shall have no harmful effect on the specimen when mounted in an upright position onto a turntable and rotated at 1 RPM
2	Protected against solid objects over 12.5mm e.g. hands, large tools	2	Vertically dripping water shall have no harmful effect when the enclosure is tilted at an angle of 15° from its normal position. A total of four positions are tested within two axes
3	Protected against solid objects over 2.5mm e.g. wire, small tool	3	Water falling as a spray at any angle up to 60° from the vertical shall have no harmful effect, utilizing either: a) an oscillating fixture, or b) A spray nozzle with a counterbalanced shield. Test a) is conducted for 5 minutes, then repeated with the specimen rotated horizontally by 90° for the second 5-minute test. Test b) is conducted (with shield in place) for 5 minutes minimum
4	Protected against solid objects over 1.0mm e.g. wires	4	Water splashing against the enclosure from any direction shall have no harmful effect, utilizing either: a) an oscillating fixture, or b) A spray nozzle with no shield. Test a) is conducted for 10 minutes. Test b) is conducted (without shield) for 5 minutes minimum
5	Ingress of dust is not entirely prevented, but it must not enter in sufficient quantity to interfere with the satisfactory operation of the equipment	5	Water projected by a nozzle (6.3 mm) against enclosure from any direction shall have no harmful effects
6	No ingress of dust; complete protection against contact (dust tight). A vacuum must be applied. Test duration of up to 8 hours based on air flow	6	Water projected in powerful jets (12.5 mm nozzle) against the enclosure from any direction shall have no harmful effects
		7	Ingress of water in harmful quantity shall not be possible when the enclosure is immersed in water under defined conditions of pressure and time (up to 1 m of submersion)
		8	The protection allows this equipment to be inmersion in to 1 meters of water without ingress during 7 days
		9K	Powerful high temperature water jets (80°C)



The IP Code, International Protection Marking, IEC standard 60529, sometimes interpreted as Ingress Protection Marking, classifies and rates the degree of protection provided against intrusion (body parts such as hands and fingers), dust, accidental contact, and water by mechanical casings and electrical enclosures. It is published by the International Electrotechnical Commission (IEC). The equivalent European standard is EN 60529.

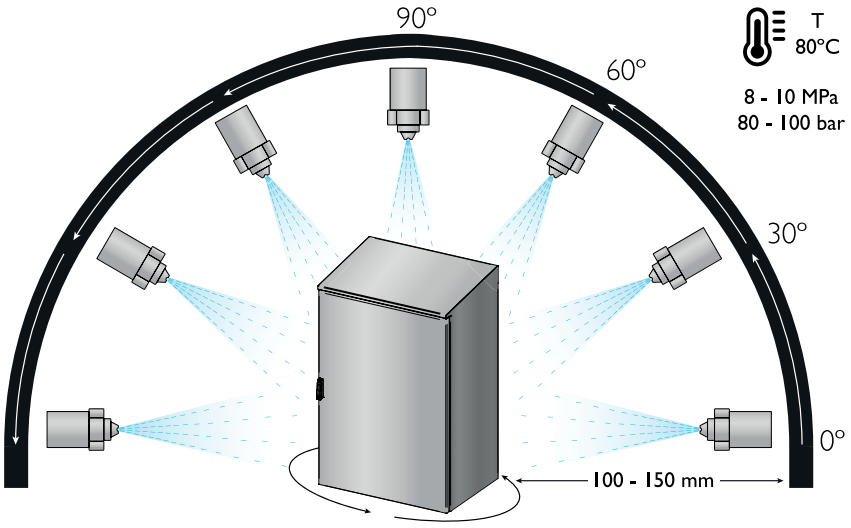

The IP6K9K rating is for applications where high pressure and high temperature washdown is used to sanitize equipment. The IP6K9K test specification was initially developed for those that need regular intensive cleaning in the Food & Beverage.
These products comply with the following regulations:

- ISO 20653 - IP6K9K.DIN EN ISO 14159 Machine safety – hygiene requirements pertaining to the design of machinery.
- DIN EN 1672-2:2006 for food industry machinery.
- Machinery Directive 2006/42/EC. Food machinery and cosmetic or pharmaceutic production.
- EHEDG Guideline Hygienic Design doc.13 machinery for open processes.



FRESH DESIGN
ENCLOSURES & BOXES

- Especially designed and officially approved for food, chemical, pharmaceutical,...
- The manufacture of the stainless steel monobloc allows sealing and ensures maximum resistance. Water channel to prevent liquids coming into contact with the polyurethane seal and hidden hinges giving perfect sealing.
- Moreover the inclination of the roof prevents objects being placed on the surface and our vertical electro polished finish helps repel liquids and prevent virus and bacteria building up on the surface.
- IP6K9K resistant powerful high temperature water jets (80°C).
- Delvalle supplies any measurements required.
- Option painted galvanized steel finish in RAL 7035 or another color.
- Temperature resistant: -40°C +100°C (short time +160°C).
- Option silicone gasket: from -60°C to +180°C (short time up to +350°C).

JUNCTION BOX FRESH GEO SERIES IP6K9K



Example

Specially Designed for Placing Push-Buttons

Fresh Geo Series IP6K9K push-button and junction boxes, elegant watertight boxes made wholly in finelypolished AISI 304L EN-14306 stainless steel available in plain or bored covers (22.5).
Specially designed for placing push-buttons.

FOR MORE INFORMATION CLICK HERE

ADVANTAGES

- Unlimited options.
- Supplied with protective film which prevents scratches and abrasions during handling.
- The manufacture of the stainless steel monobloc allows sealing and ensures maximum resistance.
- Water channel to prevent liquids coming into contact with the polyurethane seal and hidden hinges giving perfect sealing.
- Delvalle supplies any measurements required including custom built holes and cut outs both for the door and enclosure.
- Temperature resistant: -40°C +100°C (short time +160°C).
- Option silicone gasket: from -60°C to +180°C (short time up to +350°C).
- Up to IP6K9K.

APPLICATIONS

Especially designed and officially approved for food, chemical, pharmaceutical, transformer and telecommunication industries for use both inside and outside, due to the advantages of high resistance to chemical agents and durability.

OPTIONS

- Custom made based on your needs.
- Manufactured in stainless steel AISI 316L EN 14404.
- Metal legs.
- Unloosable screws.
- Transparent polycarbonate door or with tempered glass (no IP6K9K).
- Finished in textured paint RAL on request.
- Mounting plate insulator (bakelite) or painted steel.
- EMC version according to 2014/30/UE of electromagnetic compatibility.
- We have hygienic glands on request.
- Option painted galvanized steel finish in RAL 7035 or another color.

JUNCTION BOX FRESH GEO SERIES IP6K9K

NORMATIVE

- IP66 Norm IEC 60529 (IP67 on request).
- ISO 20653 - IP6K9K.
- DIN EN ISO 14159 Machine safety – hygiene requirements pertaining to the design of machinery.
- Machinery Directive 2006/42/EC. Food machinery and cosmetic or pharmaceutic production.
- EHEDG Guideline Hygienic Design doc.13 machinery for open processes.
- DIN EN 1672-2:2006 for food industry machinery.
- Maximum IK10 resistance Norm IEC 62262.
- Manufactured following EU low voltage ruling 2014/35/UE.
- RoHS Directive 2011/65/UE compliant.
- UL approval Nema 4x, 12, 3r, 1. N° File E342220.
- Maximum voltage 1000 V.
- Temperature resistant: -40°C +100°C (short time +160°C).
- Option silicone gasket: from -60°C to +180°C (short time up to +350°C).

PLAN

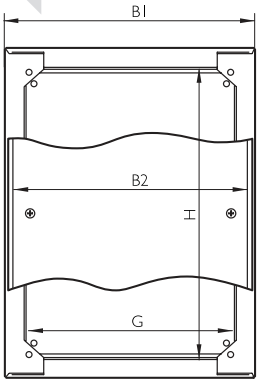

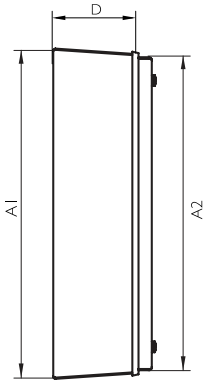

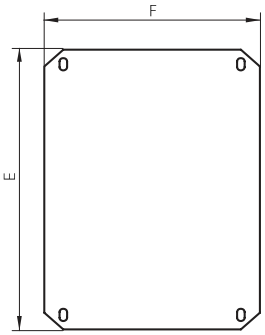

5 YEARS
MECHANICAL PARTS **GUARANTEE**

10 YEARS
STAINLESS ANTICORROSIVE **GUARANTEE**

REFERENCES

REFERENCES		COVER	DIMENSIONS (mm)							
(x) BLIND DOOR	PERFORATED COVER	N° HOLES	HEIGHT - A1 -	WIDTH - B1 -	DEPTH - C -	ACCES - DxE -	MECHANIZABLE AREA	PLATE MEASUREMENT - FxE -	WEIGHT (Kg)	VOLUME (m^3)
MVCBJ909080/69	MVCBJ909080P/69	1	90	90	80	66x66	48x48	60x70	0,68	0,001
MVCBJ149080/69	MVCBJ149080P/69	2	140	90	80	116x66	98x48	110x70	0,92	0,001
MVCBJ209080/69	MVCBJ209080P/69	3	200	90	80	176x66	158x48	170x70	1,2	0,002
MVCBJ269012/69	MVCBJ269012P/69	4	260	90	120	236x66	218x48	230x70	1,75	0,004
MVCBJ289080/69	MVCBJ289080P/69	5	280	90	80	256x66	238x48	250x70	1,6	0,003
MVCBJ101612/69	MVCBJ101612P/69	3	100	160	120	76x136	58x118	70x140	1,29	0,003
MVCBJ161612/69	MVCBJ161612P/69	4	160	160	120	136x136	118x118	130x140	1,81	0,004
MVCBJ202012/69	MVCBJ202012P/69	6	200	200	120	176x176	158x158	170x180	2,53	0,006
MVCBJ202515/69	MVCBJ202515P/69	12	200	250	150	176x226	158x208	170x230	3,25	0,009
MVCBJ252515/69	MVCBJ252515P/69	16	250	250	150	226x226	208x208	220x230	3,87	0,011
MVCBJ203015/69	MVCBJ203015P/69	15	200	300	150	176x276	158x258	170x280	3,75	0,011
MVCBJ303015/69	MVCBJ303015P/69	25	300	300	150	276x276	258x258	270x280	5,16	0,016
MVCBJ304015/69	MVCBJ304015P/69	35	300	400	150	276x376	258x358	270x380	6,64	0,022
MVCBJ404015/69	MVCBJ404015P/69	49	400	400	150	376x376	358x358	370x380	8,41	0,028

(x) Version: Norm UL	Add "UL" to reference. Ex: "MVCBJ909080UL"

Phone +34 945 601 381
comercial@delvalle.es | www.delvallebox.com

ELECTRICAL ENCLOSURE **FRESH TRIBECA SERIES** IP6K9K



Example

Special Enclosure for Food Industry IP6K9K

Electrical Fresh Tribeca Series IP6K9K enclosure with a large capacity, specially designed for the food industry.
No openings, hinges, where bacteria could lie. Easy opening by rotating handle and four point lock, easy placement on the floor, flexible, maximum working width.
Moreover the inclination of the roof prevents objects being placed on the surface and our vertical electro polished finish helps repel liquids and prevent virus and bacteria building up on the surface.

FOR MORE INFORMATION CLICK HERE



ELECTRICAL ENCLOSURE FRESH TRIBECA SERIES IP6K9K

APPLICATIONS

Especially designed for the food industry and sterile rooms, wineries, dairies and take away food outlets or any other place where cleanliness is essential as well as total absence of dust, dirt and bacteria.

NORMATIVE

- IP66 (IP55 two doors) by request. Norm IEC 60529.
- ISO 20653 - IP6K9K.
- Maximum IK10 resistance Norm IEC 62262.
- EC 1935/2004 rule compliant for materials intended to come into contact with food.
- DIN EN ISO 14159 Machine safety – hygiene requirements pertaining to the design of machinery.
- Machinery Directive 2006/42/EC (previously 89/37/EC) Food machinery and cosmetic or pharmaceutic production.
- EHEDG Guideline Hygienic Design doc.13 machinery for open processes.
- DIN EN 1672-2:2006 for food industry machinery.
- Manufactured following EU low voltage ruling 2014/35/UE.
- Compliant RoHS Directive.
- UL approval Nema 4x, 12, 3r, 1. Nº File E342220.
- Maximum voltage 1000 V.
- Temperature resistant: -40°C +100°C (short time +160°C).
- Option silicone gasket: from -60°C to +180°C (short time up to +350°C).

OPTIONS

- Custom made based on your needs.
- With a choice of two doors (from 1200 mm width).
- Plinths at base. Castors. Metal legs.
- Clear polycarbonate door or transparent safety glass door (no IP6K9K).
- Manufactured in stainless steel AISI 316L. EN 14404.
- Mounting plate insulator (bakelite) or stainless steel.
- We have hygienic glands on request.
- Option painted galvanized steel finish in RAL 7035 or another color.

ADVANTAGES

- Supplied wrapped in protective film which prevents scratches and abrasions during handling.
- The monobloc manufacture gives total sealing and maximum resistance.
- No openings where bacteria could lie.
- With electro-polished finish that helps to slide the liquid and waterproof seal that prevents dirt and bacteria deposits.
- 100% stainless steel, from handle to opening system.
- 120º door opening. Standard opening to the left. Specify if you need opening to the right.
- Standard electrical panel and handle lock with four locking points and concealed stainless steel hinges.
- Delvalle supplies any measurements required including custom built holes and cut outs both for the door and enclosure.
- Distribuited load 600 Kg.

ELECTRICAL ENCLOSURE FRESH TRIBECA SERIES IP6K9K

PLAN

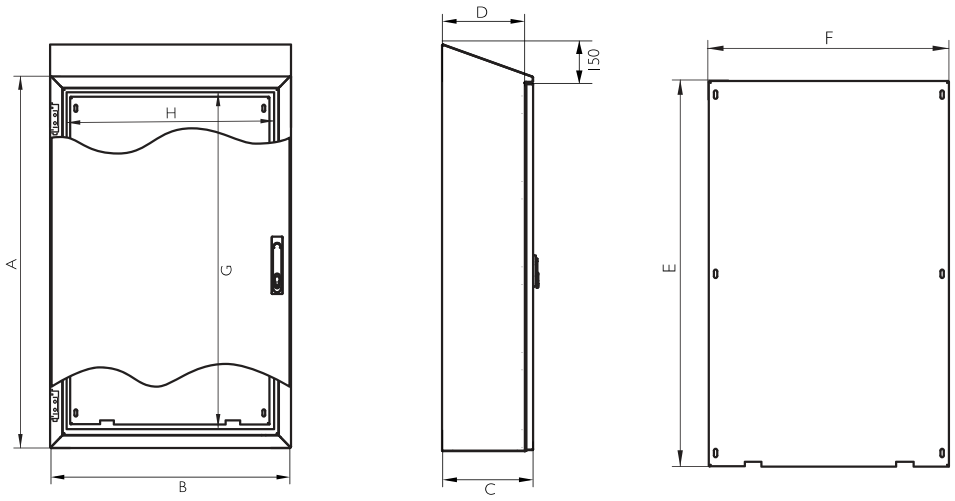

5 YEARS
MECHANICAL PARTS
GUARANTEE

10 YEARS
STAINLESS
ANTICORROSIVE
GUARANTEE

REFERENCES 1 DOOR

REFERENCES	DIMENSIONS (mm)								
BLIND DOOR	HEIGHT - A -	WIDTH - B -	DEPTH - C -	INSIDE HEIGHT - D -	INSIDE WIDTH - E -	INSIDE DEPTH - F -	PLATE MEASUREMENT -ExF-	WEIGHT (Kg)	VOLUME (m^3)
MVACJ166040/69	1650	600	400	1390	490	375	1520x470	70,9	0,42
MVACJ168040/69	1650	800	400	1390	690	375	1520x670	93,25	0,56
MVACJ161040/69	1650	1000	400	1390	890	375	1520x870	111,3	0,70
MVACJ186040/69	1800	600	400	1540	490	375	1670x470	76,61	0,46
MVACJ186050/69	1800	600	500	1540	490	475	1670x470	84,69	0,57
MVACJ188040/69	1800	800	400	1540	690	375	1670x670	100,76	0,61
MVACJ188050/69	1800	800	500	1540	690	475	1670x670	107,21	0,76
MVACJ181040/69	1800	1000	400	1540	890	375	1670x870	120,24	0,76
MVACJ181050/69	1800	1000	500	1540	890	475	1670x870	127,18	0,95
MVACJ206040/69	2000	600	400	1740	490	375	1870x470	84,68	0,51
MVACJ208040/69	2000	800	400	1740	690	375	1870x670	111,19	0,68
MVACJ208050/69	2000	800	500	1740	690	475	1870x670	118,13	0,85
MVACJ201040/69	2000	1000	400	1740	890	375	1870x870	132,58	0,85
MVACJ201050/69	2000	1000	500	1740	890	475	1870x870	140	1,05

Version: Norm UL	Add "UL" to reference. Ex: "MVACJ166040 UL"



Separation depth plate 20mm

REFERENCES 2 DOORS

REFERENCES	DIMENSIONS (mm)								
BLIND DOOR	HEIGHT - A -	WIDTH - B -	DEPTH - C -	INSIDE HEIGHT - D -	INSIDE WIDTH - E -	INSIDE DEPTH - F -	PLATE MEASUREMENT -ExF-	WEIGHT (Kg)	VOLUME (m^3)
MVACJ161240/69	1650	1200	400	1390	1090	375	1520x1070	129,33	0,84
MVACJ181240/69	1800	1200	400	1540	1090	375	1670x1070	139,7	0,91
MVACJ181250/69	1800	1200	500	1540	1090	475	1670x1070	147,12	1,14
MVACJ201240/69	2000	1200	400	1740	1090	375	1870x1070	149,61	1,01
MVACJ201250/69	2000	1200	500	1740	1090	475	1870x1070	157,51	1,26
MVACJ201440/69	2000	1400	400	1740	1290	375	1870x1270	169,38	1,18
MVACJ201450/69	2000	1400	500	1740	1290	475	1870x1270	177,76	1,47
MVACJ201640/69	2000	1600	400	1740	1490	375	1870x1470	189,12	1,35
MVACJ201650/69	2000	1600	500	1740	1490	475	1870x1470	197,99	1,68

Version: Norm UL	Add "UL" to reference. Ex: "MVACJ166040 UL"



Separation depth plate 20mm

ELECTRICAL ENCLOSURE **FRESH LUXOR SERIES** IP6K9K



Example

Monobloc Manufacture IP6K9K Gives Total Sealing and Maximum Resistance

Electrical hygienic enclosure Fresh Series IP6K9K, specially designed for the food industry.
No openings, hinges, where bacteria could lie but robust and easy lock opening with a big space inside to allow easy working.
Moreover the inclination of the roof prevents objects being placed on the surface and our vertical electro polished finish helps repel liquids and prevent virus and bacteria building up on the surface.

FOR MORE INFORMATION CLICK HERE

ADVANTAGES

- Supplied wrapped in protective film which prevents scratches and abrasions during handling.
- The monobloc manufacture gives total sealing and maximum resistance.
- No openings where bacteria could lie.
- 120º door opening. Standard opening to the left. Specify if you need opening to the right.
- With electro-polished finish that helps dispel liquids and waterproof seal that prevents dirt and bacteria deposits.
- Delvalle supplies any measurements required including custom built holes and cut outs both for the door and enclosure.

APPLICATIONS

Especially designed for the food industry and sterile rooms, wineries, dairies and take away food outlets or any other place where cleanliness is essential as well as total absence of dust, dirt and bacteria.

OPTIONS

- Custom made based on your needs.
- Also made with two doors (from 800x600).
- Plinths at base. Metal legs.
- Transparent polycarbonate door (no IP6K9K).
- Manufactured in stainless steel AISI 316L.
- Mounting plate insulator (bakelite) or sst.
- We have hygienic glands on request.
- Option painted galvanized steel finish in RAL 7035 or another color.

ELECTRICAL ENCLOSURE **FRESH LUXOR SERIES** IP6K9K

NORMATIVE

- IP66 Norm IEC 60529.
- ISO 20653 - IP6K9K.
- Maximum IK10 resistance Norm IEC 62262.
- EC 1935/2004 rule compliant for materials intended to come into contact with food.
- DIN EN ISO 14159 Machine safety – Hygienic requirements pertaining to the design of machinery.
- DIN EN 1672-2:2006 for food industry machinery.
- Follows EU low voltage ruling 2014/35/UE.
- RoHS Directive 2011/65/UE compliant.
- Machinery Directive 2006/42/EC (previously 89/37/EC) Food machinery and cosmetic or pharmaceutic production.
- EHEDG Guideline Hygienic Design doc.13 machinery for open processes.
- UL approval Nema 4x, 12, 3r, 1. N° File E342220.
- Maximum voltage 1000 V.
- Temperature resistant: -40°C +100°C (short time +160°C).
- Option silicone gasket: from -60°C to +180°C (short time up to +350°C).

PLAN

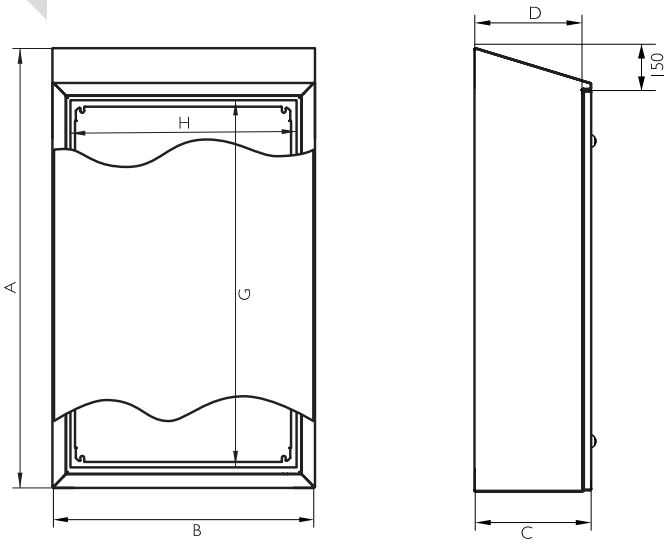

5 YEARS
MECHANICAL PARTS **GUARANTEE**

10 YEARS
STAINLESS ANTICORROSIVE **GUARANTEE**

REFERENCES

REFERENCES	DIMENSIONS (mm)									
BLIND DOOR	HEIGHT -A-	WIDTH -B-	DEPTH -C-	ACCESS -GxH-	DEPTH INSIDE -D-	MECHANIZABLE AREA		PLATE MEASUREMENT -ExF-	WEIGHT (Kg)	VOLUME (m^3)
						DOOR	SIDE			
MVAJ503015/69	500	300	155	296x246	125	280,2x195,2	459,2x95	290x240	8,95	0,03
MVAJ723815/69	720	380	155	516x326	125	500,2x275,2	679,2x95	510x 320	15,25	0,05
MVAJ753821/69	750	380	210	546x326	180	530,2x275,2	709,2x150	540x320	17,23	0,07
MVAJ554021/69	550	400	210	346x346	180	330,2x295,2	509,2x150	340x340	13,51	0,05
MVAJ655021/69	650	500	210	446x446	180	430,2x395,2	609,2x150	440x440	18,91	0,08
MVAJ855021/69	850	500	210	646x446	180	630,2x395,2	809,2x150	640x440	24,23	0,10
MVAJ756021/69	750	600	210	546x546	180	530,2x495,2	709,2x150	540x540	25,13	0,11
MVAJ106030/69	1000	600	300	796x546	270	780,2x495,2	959,2x240	790x540	36,31	0,20
MVAJ108030/69	1000	800	300	796x746	270	728x635	959,2x240	790x740	47,89	0,26
MVAJ128030/69	1200	800	300	996x746	270	928x635	1159,2x240	990x740	57,13	0,31
MVAJ148030/69	1400	800	300	1196x746	270	1128x635	1359,2x240	1190x740	65,92	0,36
MVAJ121030/69	1200	1000	300	996x946	270	928x835	1159,2x240	990x940	68,94	0,39

Version: Norm UL Nema 4x, 12, 3r y 1 | Add "UL" to reference. Ex: "MVAB302015UL"

HYGIENIC DESIGN ENCLOSURES & BOXES

- Especially designed and officially approved for food, chemical, pharmaceutical,...
- The manufacture of the stainless steel monobloc allows sealing and ensures maximum resistance. Water channel to prevent liquids coming into contact with the polyurethane seal and hidden hinges giving perfect sealing.
- Moreover the inclination of the roof prevents objects being placed on the surface and our vertical electro polished finish helps repel liquids and prevent virus and bacteria building up on the surface.
- IP6K9K resistant powerful high temperature water jets (80°C).
- Delvalle supplies any measurements required.
- Option painted galvanized steel finish in RAL 7035 or another color.
- Temperature resistant: -40°C +100°C (short time +160°C).
- Silicone blue gasket: from -60°C to +200°C (short time up to +350°C) and special anti-bacteria closures.



ELECTRICAL ENCLOSURE HYGIENIC LUXOR SERIES IP6K9K

WITH SILICONE GASKET



Example

Monobloc Manufacture IP6K9K Gives Total Sealing and Maximum Resistance

Hygienic Design Luxor electrical enclosure IP6K9K wall made of stainless steel AISI 304L or AISI 316L. Specially designed for the food industry.
No openings, hinges, where bacteria could lie but robust and easy lock opening with a big space inside to allow easy working. Moreover the inclination of the roof prevents objects being placed on the surface and our vertical electro polished finish helps repel liquids and prevent virus and bacteria building up on the surface.

FOR MORE INFORMATION CLICK HERE



ELECTRICAL ENCLOSURE HYGIENIC LUXOR SERIES IP6K9K

APPLICATIONS

Especially designed for the food industry and sterile rooms, wineries, dairies and take away food outlets or any other place where cleanliness is essential as well as total absence of dust, dirt and bacteria.

5 YEARS
MECHANICAL PARTS **GUARANTEE**

10 YEARS
STAINLESS ANTICORROSIVE **GUARANTEE**

ADVANTAGES

- Supplied wrapped in protective film which prevents scratches and abrasions during handling.
- Resistant seal to temperatures from -60°C up to +200°C.
- The monobloc manufacture gives total sealing and maximum resistance.
- No openings where bacteria could lie.
- 90° door opening. Standard opening to the left. Specify if you need opening to the right.
- With electro-polished finish that helps dispel liquids and waterproof seal that prevents dirt and bacteria deposits.
- Delvalle supplies any measurements required including custom built holes and cut outs both for the door and enclosure.
- Temperature resistant: -40°C +100°C (short time +160°C).
- Option silicone gasket: from -60°C to +180°C (short time up to +350°C).
- Captives screws.

OPTIONS

- Custom made based on your needs.
- Also made with two doors (from 800x600).
- Plinths at base and metal legs.
- Transparent polycarbonate door (no IP6K9K).
- Manufactured in stainless steel AISI 316L.
- Mounting plate insulator (bakelite) or sst.
- We have hygienic glands on request.
- Option painted galvanized steel finish in RAL 7035 or another color.

NORMATIVE

- IP66 Norm IEC 60529.
- ISO 20653 - IP6K9K.
- Maximum IK10 resistance Norm IEC 62262.
- EC 1935/2004 rule compliant for materials intended to come into contact with food.
- DIN EN ISO 14159 Machine safety – Hygiene requirements pertaining to the design of machinery.
- Machinery Directive 2006/42/EC (previously 89/37/EC) Food machinery and cosmetic or pharmaceutic production.
- EHEDG Guideline Hygienic Design doc.13 machinery for open processes.
- DIN EN 1672-2:2006 for food industry machinery.
- Follows EU low voltage ruling 2014/35/UE.
- RoHS Directive 2011/65/UE compliant.
- UL approval Nema 4x, 12, 3r, 1. Nº File E342220.
- Maximum voltage 1000 V.
- Temperature resistant: -40°C +100°C (short time +160°C).
- Option silicone gasket: from -60°C to +180°C (short time up to +350°C).

ELECTRICAL ENCLOSURE HYGIENIC LUXOR SERIES IP6K9K

PLAN

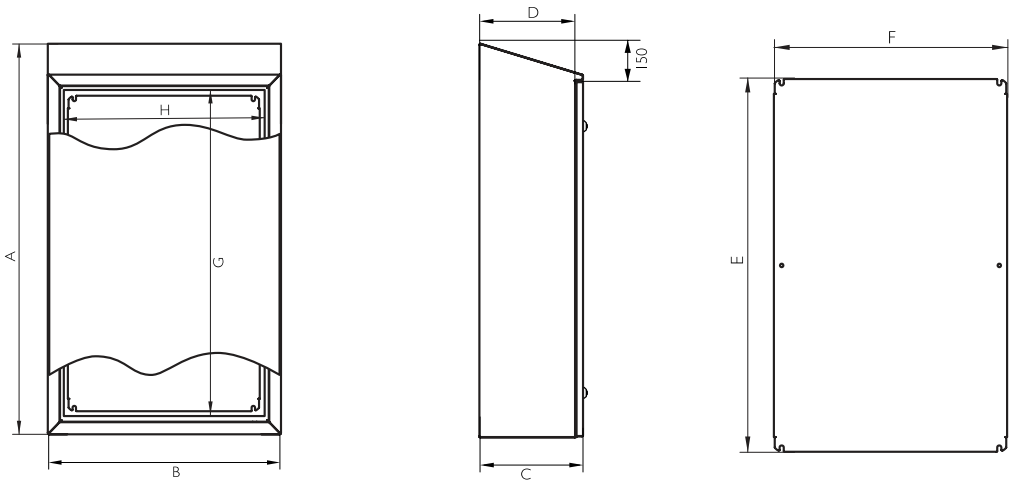

5 YEARS
MECHANICAL PARTS **GUARANTEE**

10 YEARS
STAINLESS ANTICORROSIVE **GUARANTEE**

REFERENCES

REFERENCES	DIMENSIONS (mm)									
BLIND DOOR	HEIGHT -A-	WIDTH -B-	DEPTH -C-	ENTRY ACCESS -GxH-	DEEP USEFUL -D-	MECHANIZABLE AREA		PLATE MEASUREMENT -ExF-	WEIGHT (Kg)	VOLUME (m^3)
						DOOR	SIDE			
HDL373015/69	370	300	155	272x247	133,5	155,2x191	329,4x101	265x240	7,24	0,02
HDL452215/69	450	220	155	347x167	133,5	230,2x111	404,.4x101	340x160	6,86	0,02
HDL544021/69	540	400	210	442x347	188,5	325,2x291	499,4x156	435x340	13,93	0,05
HDL546021/69	540	600	210	442x547	188,5	325,2x491	499,4x156	435x540	19,39	0,08
HDL553921/69	550	390	210	447x337	188,5	330,2x281	504,4x156	440x330	13,88	0,05
HDL606121/69	600	610	210	497x557	188,5	380,2x501	554,4x156	490x550	24,26	0,12
HDL655121/69	650	510	210	547x457	188,5	430,2x401	604,4x156	540x450	20,07	0,08
HDL665021/69	660	500	210	562x447	188,5	445,2x391	619,4x156	555x440	20,02	0,08
HDL753921/69	750	390	210	647x337	188,5	530,2x281	704,4x156	640x330	18,47	0,07
HDL756121/69	750	610	210	647x557	188,5	530,2x501	704,4x156	640x550	26,5	0,11
HDL764521/69	760	450	210	662x397	188,5	545,2x341	719,4x156	655x540	20,92	0,08
HDL766021/69	760	600	210	662x547	188,5	545,2x491	719,4x156	655x540	26,45	0,11
HDL766030/69	760	600	300	662x547	278,5	545,2x491	719,4x246	655x540	29,06	0,15
HDL128130/69	1250	810	300	1147x757	278,5	1030,2x701	1204,4x246	1140x750	59	0,33
HDL128140/69	1250	810	400	1147x757	378,5	1030,2x701	1204,4x346	1140x750	63,75	0,43
HDL148130/69	1450	810	300	1347x757	278,5	1230,2x701	1404,4x246	1340x750	67,87	0,38
HDL148140/69	1450	810	400	1347x757	378,5	1230,2x701	1404,4x346	1340x750	73,1	0,50

Delvalle custom made any size you can not find in this table. Available bottom to 1000 mm

MOUNTING OPTIONS



Wall support

WALL SUPPORT	
REFERENCES	MATERIAL
HD1000SOP	INOX 303
HD1000SOP/6	INOX 316

TRESTLE			
REFERENCES	HEIGHT	WIDTH	DEPTH
HDL208130BAS	200	810	300
HDL208140BAS	200	810	400
HDL308130BAS	300	810	300
HDL308140BAS	300	810	400



Trestle

JUNCTION BOX HYGIENIC GEO SERIES IP6K9K

WITH SILICONE GASKET



Example

The sides have an inclination of 3°

Strength, Durability and Long Life IP6K9K

Hygienic Geo Series IP6K9K push-button and junction boxes, elegant watertight boxes made wholly in finely polished AISI 304L EN-14306 stainless steel available in plain or bored covers (22.5).
Specially designed for placing push-buttons.

FOR MORE INFORMATION CLICK HERE

ADVANTAGES

- Supplied with protective film which prevents scratches and abrasions during handling.
- The manufacture of the stainless steel monobloc allows sealing and ensures maximum resistance.
- Water channel to prevent liquids coming into contact with the polyurethane seal and hidden hinges giving perfect sealing.
- Resistant seal to temperatures from -60°C up to +200°C.
- Captives srews.
- Finished in textured paint RAL on request.

APPLICATIONS

Especially designed and officially approved for food, chemical, pharmaceutical, transformer and telecommunication industries for use both inside and outside, due to the advantages of high resistance to chemical agents and durability.

OPTIONS

- Custom made based on your needs.
- Manufactured in stainless steel AISI 316L. EN 14404.
- Metal legs, unloosable screws.
- Transparent polycarbonate door or with tempered glass (no IP6K9K).
- Mounting plate insulator (bakelite) or painted steel.
- EMC version according to 2014/30/UE of electromagnetic compatibility
- We have hygienic glands on request.
- Option painted galvanized steel finish in RAL 7035 or another color.

JUNCTION BOX HYGIENIC GEO SERIES IP6K9K

NORMATIVE

- IP66 Norm IEC 60529 (IP67 on request).
- ISO 20653 - IP6K9K.
- DIN EN ISO 14159 Machine safety – hygiene requirements pertaining to the design of machinery.
- Machinery Directive 2006/42/EC. Food machinery and cosmetic or pharmaceutic production.
- EHEDG Guideline Hygienic Design doc.13 machinery for open processes.
- Maximum IK10 resistance Norm IEC 62262.
- DIN EN 1672-2:2006 for food industry machinery.
- Manufactured following EU low voltage ruling 2014/35/UE
- RoHS Directive 2011/65/UE compliant.
- UL approval Nema 4x, 12, 3r, 1. N° File E342220.
- Maximum voltage 1000 V
- Temperature resistant: -40°C +100°C (short time +160°C).
- Option silicone gasket: from -60°C to +180°C (short time up to +350°C).

PLAN

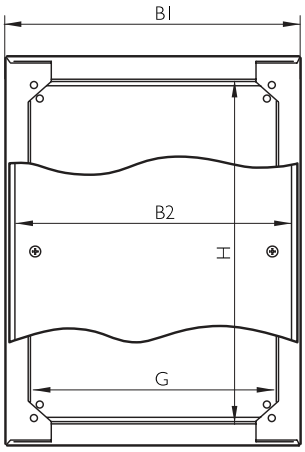

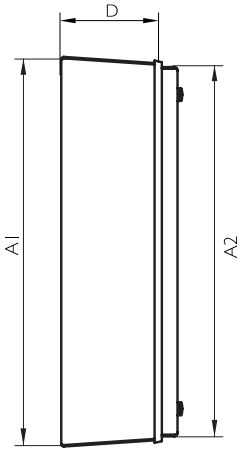

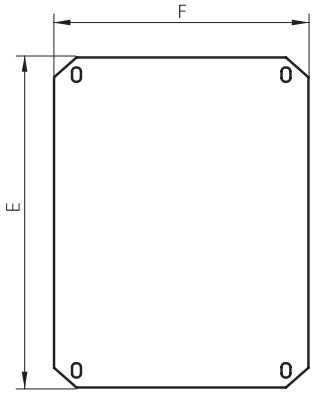

5 YEARS
MECHANICAL PARTS **GUARANTEE**

10 YEARS
STAINLESS ANTICORROSIVE **GUARANTEE**

REFERENCES

REFERENCES	DIMENSIONS (mm)											
BLIND DOOR	HEIGHT		WIDTH		DEPTH -C-	ENTRY ACCESS -GxH-	DEEP USEFUL -D-	AREA MECHANIZABLE COVER	AREA SIDE MECHANIZABLE	PLATE -ExF-	WEIGHTS (Kg)	VOL. (m^3)
	CORPS -A1-	COVER -A2-	CORPS -B1-	COVER -B2-								
HDG151580/69	156	150	156	150	80	110x110	59,8	80x80	124,6x26,1	100x120	1,72	0,003
HDG151512/69	160	150	160	150	120	110x110	99,8	80x80	128,8x66,2	100x120	2,06	0,004
HDG202012/69	210	200	210	200	120	160x160	99,8	130x130	178,8x66,2	150x170	3,09	0,007
HDG302012/69	310	300	210	200	120	260x160	99,8	230x130	278,8x66,2	250x170	4,17	0,010
HDG402012/69	410	400	310	200	120	360x160	99,8	330x130	378,8x66,2	350x170	6,3	0,019
HDG403012/69	410	400	310	300	120	360x260	99,8	330x230	378,8x66,2	350x270	7,25	0,019

Version normative Ul. Nema 4x, 12, 3r y 1	Add "UL" to reference. Ex: "HDG151580UL"

Delvalle custom made any size you can not find in this table. Available bottom to 1000 mm



WALL SUPPORT	
REFERENCES	MATERIAL
HD1000SOP	INOX 303
HD1000SOP/6	INOX 316

ELECTRICAL ENCLOSURE **HYGIENIC TRIBECA SERIES** IP6K9K

WITH SILICONE GASKET



Examples



Monobloc Manufacture IP6K9K Gives Total Sealing and Maximum Resistance

Electrical Hygienic Design Tribeca Series IP6K9K enclosure with a large capacity, specially designed for the food industry.
No openings, hinges, where bacteria could lie. Easy opening by rotating handle and four point lock, easy placement on the floor, flexible, maximum working width.
Moreover the inclination of the roof prevents objects being placed on the surface and our vertical electro polished finish helps repel liquids and prevent virus and bacteria building up on the surface.

FOR MORE INFORMATION CLICK HERE

APPLICATIONS

Especially designed for the food industry and sterile rooms, wineries, dairies and take away food outlets or any other place where cleanliness is essential as well as total absence of dust, dirt and bacteria.

ELECTRICAL ENCLOSURE HYGIENIC TRIBECA SERIES IP6K9K

ADVANTAGES

- Supplied wrapped in protective film which prevents scratches and abrasions during handling.
- Resistant seal to temperatures from -60°C up to +200°C.
- The monobloc manufacture gives total sealing and maximum resistance.
- No openings where bacteria could lie.
- With electro-polished finish that helps to slide the liquid and waterproof seal that prevents dirt and bacteria deposits.
- 100% stainless steel from handle to opening system. 120° door opening. Standard opening to the left.
- Specify if you need opening to the right.
- Standard electrical panel and handle lock with four locking points and concealed stainless steel hinges.
- Delvalle supplies any measurements required including custom built holes and cut outs both for the door and enclosure.
- Distribuited load 600 Kg.
- Captives screws.

OPTIONS

- Custom made based on your needs.
- With a choice of two doors (from 1200 mm width).
- Plinths at base. Castors. Metal legs.
- Clear polycarbonate door or transparent safety glass door (no IP6K9K).
- Manufactured in stainless steel AISI 316L. EN 14404.
- Mounting plate insulator (bakelite) or stainless steel.
- We have hygienic glands on request.
- Option painted galvanized steel finish in RAL 7035 or another color.



NORMATIVE

- IP66 (IP55 two doors) by request. Norm IEC 60529.
- ISO 20653 - IP6K9K.
- Maximum IK10 resistance Norm IEC 62262.
- EC 1935/2004 rule compliant for materials intended to come into contact with food.
- DIN EN ISO 14159 Machine safety – Hygienic requirements pertaining to the design of machinery.
- Machinery Directive 2006/42/EC (previously 89/37/EC) Food machinery and cosmetic or pharmaceutic production.
- EHEDG Guideline Hygienic Design doc.13 machinery for open processes.
- DIN EN 1672-2:2006 for food industry machinery.
- Manufactured following EU low voltage ruling 2014/35/UE.
- Compliant RoHS Directive.
- UL approval Nema 4x, 12, 3r, 1. Nº File E342220.
- Maximum voltage 1000 V.
- Temperature resistant: -40°C +100°C (short time +160°C).
- Option silicone gasket: from -60°C to +180°C (short time up to +350°C).

ELECTRICAL ENCLOSURE HYGIENIC TRIBECA SERIES IP6K9K

PLAN

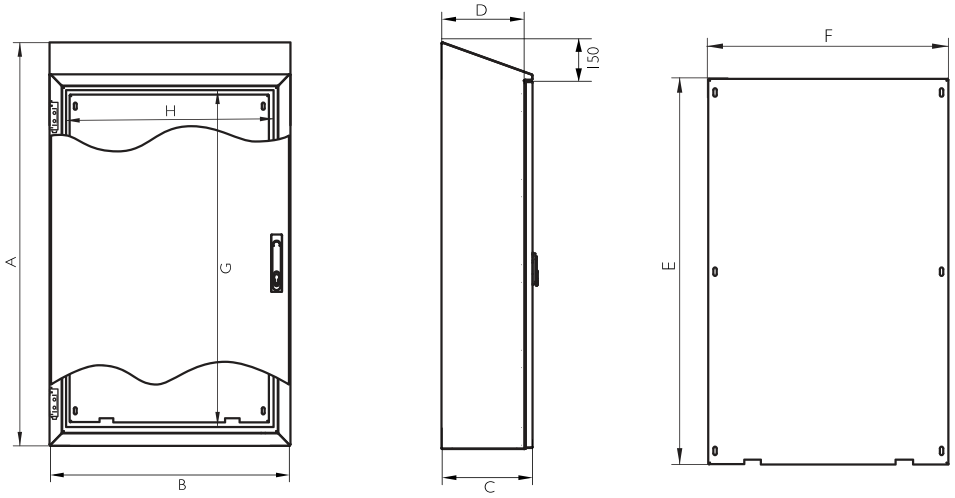

5 YEARS
MECHANICAL PARTS **GUARANTEE**

10 YEARS
STAINLESS ANTICORROSIVE **GUARANTEE**

REFERENCES

REFERENCES	DIMENSIONS (mm)									
BLIND DOOR	HEIGHT -A-	WIDTH -B-	DEPTH -C-	ENTRY ACCESS -GXH-	DEPTH USEFUL -D-	AREA MECHANIZABLE DOOR	AREA SIDE MECHANIZABLE	ACCESS PLATE MEASUREMENT -ExF-	WEIGHT (Kg)	VOLUME (m^3)
HDT166040/69	1650	600	400	1447x500	375,5	1424x487,8	1614,8x344	1520x490	70,9	0,42
HDT168040/69	1650	800	400	1447x700	375,5	1424x687,8	1614,8x344	1520x690	93,25	0,56
HDT161040/69	1650	1000	400	1447x900	375,5	1424x887,8	1614,8x344	1520x890	111,3	0,70
HDT186040/69	1800	600	400	1597x500	375,5	1574x487,8	1764,8x344	1670x490	76,61	0,46
HDT186050/69	1800	600	500	1597x500	475,5	1574x487,8	1766x444	1670x490	84,69	0,57
HDT188040/69	1800	800	400	1597x700	375,5	1574x687,8	1764,8x344	1670x690	100,76	0,61
HDT188050/69	1800	800	500	1597x700	475,5	1574x687,8	1766x444	1670x690	107,21	0,76
HDT181040/69	1800	1000	400	1597x900	375,5	1574x887,8	1764,8x344	1670x890	120,24	0,76
HDT181050/69	1800	1000	500	1597x900	475,5	1574x887,8	1766x444	1670x890	127,18	0,95
HDT206040/69	2000	600	400	1797x500	375,5	1774x487,8	1964,8x344	1870x490	84,68	0,51
HDT206050/69	2000	600	500	1797x500	475,5	1774x487,8	1964,8x444	1870x490	93,46	0,64
HDT208040/69	2000	800	400	1797x700	375,5	1774x687,8	1964,8x344	1870x690	118,13	0,85
HDT208050/69	2000	800	500	1797x700	475,5	1774x687,8	1966x444	1870x690	118,13	0,85
HDT201040/69	2000	1000	400	1797x900	375,5	1774x887,8	1964,8x344	1870x890	132,58	0,85
HDT201050/69	2000	1000	500	1797x900	475,5	1774x887,8	1966x444	1870x890	140	1,05

Delvalle custom made any size you can not find in this table. Available bottom to 1000 mm

MOUNTING OPTIONS



Metal legs

TRESTLE
REFERENCE
HD2000PAT

METAL LEGS			
REFERENCES	HEIGHT	WIDTH	DEPTH
HDT206040BAS	200	600	400
HDT208040BAS	200	800	400
HDT201040BAS	200	1000	400
HDT206050BAS	200	600	500
HDT208050BAS	200	800	500
HDT201050BAS	200	1000	500
HDT306040BAS	300	600	400
HDT308040BAS	300	800	400
HDT301040BAS	300	1000	400
HDT306050BAS	300	600	500
HDT308050BAS	300	800	500
HDT301050BAS	300	1000	500



Trestle

STAINLESS STEEL ENCLOSURES & CABLE GLANDS

- Electrical control panel approved for food, chemical and pharmaceutical industries, processing plants, telecommunication centers and outdoor use because of its high durability and chemical product resistance.
- The manufacture of the stainless steel monobloc allows sealing and ensures maximum resistance.
- IP6K9K resistant powerful high temperature water jets (80°C).
- Delvalle supplies any measurements required.
- Option painted galvanized steel finish in RAL 7035 or another color.
- Temperature resistant: -40°C +100°C (short time +160°C).
- Option silicone gasket: from -60°C to +180°C (short time up to +350°C).



STAINLESS STEEL WALL MOUNTED ENCLOSURES

LUXOR SERIES IP6K9K



Example

Maximum Working Width for your Assemblies IP6K9K

Electrical enclosures Luxor Series IP6K9K with improved design and materials used of locks, easy to open, smoothly turning and opening, flexibility, maximum opening of the doors (up to 120 °), maximum working width for your assemblies, easily removable, unique performance with cutting-edge polished surface finish.
All tests necessary to ensure safety in their electrical installations. Furthermore, each component has exceeded several tests under extreme conditions guaranteeing a long life in electrical assembly.

FOR MORE INFORMATION CLICK HERE



STAINLESS STEEL WALL MOUNTED ENCLOSURES **LUXOR SERIES** IP6K9K



Available opening with 3-locking point handle



APPLICATIONS

- Specially designed for automatic meter positioning, machine controls, and offering, where necessary, a smart look, high quality and durability.
- Electrical control panel approved for food, chemical and pharmaceutical industries, processing plants, telecommunication centers and outdoor use because of its high durability and chemical product resistance.

ADVANTAGES

- Supplied protective film wrapped to prevent scratches and abrasions during handling.
- The manufacture of the stainless steel monobloc gives 100% sealing and maximum resistance.
- With flushing channel that avoids any contact with liquids, polyurethane joints and hidden hinges.
- The standard control panel comes with stainless steel double-bit locking handles.
- Delvalle supplies any measurements required including custom built holes and cut outs both for the door and enclosure.

OPTIONS

- Custom made based on your needs.
- Option painted galvanized steel finish in RAL 7035 or another color.Possibility of two doors (from 800x600).
- 170° hinge that allows maximum opening for easy access to the cabinet without removing the door.
- Plinths at base. Metal legs.
- Option painted galvanized steel finish in RAL 7035 or another color.
- Wall support (not included in the standard model).
- Transparent polycarbonate door or ransparent safety glass door (no IP6K9K).
- Manufactured in stainless steel AISI 316L EN 14404.
- Mounting plate insulation (bakelite) or stainless steel.
- EMC version according to 2014/30/UE of electromagnetic compatibility.
- Available opening with 3-locking point handle.

STAINLESS STEEL WALL MOUNTED ENCLOSURES **LUXOR SERIES** IP6K9K



NORMS

- IP66 (IP55 double door without mounting, IP66 with central welded bar mounting) Norm IEC EN 62208 and EN 60529.
- ISO 20653 - IP6K9K.
- DIN EN ISO 14159 Machine safety – hygiene requirements pertaining to the design of machinery.
- Machinery Directive 2006/42/EC. Food machinery and cosmetic or pharmaceutic production.
- EHEDG Guideline Hygienic Design doc.13 machinery for open processes.
- DIN EN 1672-2:2006 for food industry machinery.
- Maximum IK10 resistance Norm IEC 62208 and IEC 62262.
- Maximum voltage 1000 V.
- Manufactured following EU low voltage ruling 2014/35/UE.
- Materials intended to come into contact with food EC 1935/2004.
- RoHs compliant.
- UL approval Nema 4x, 12, 3r y1 (by request). N° File E342220.

PLAN

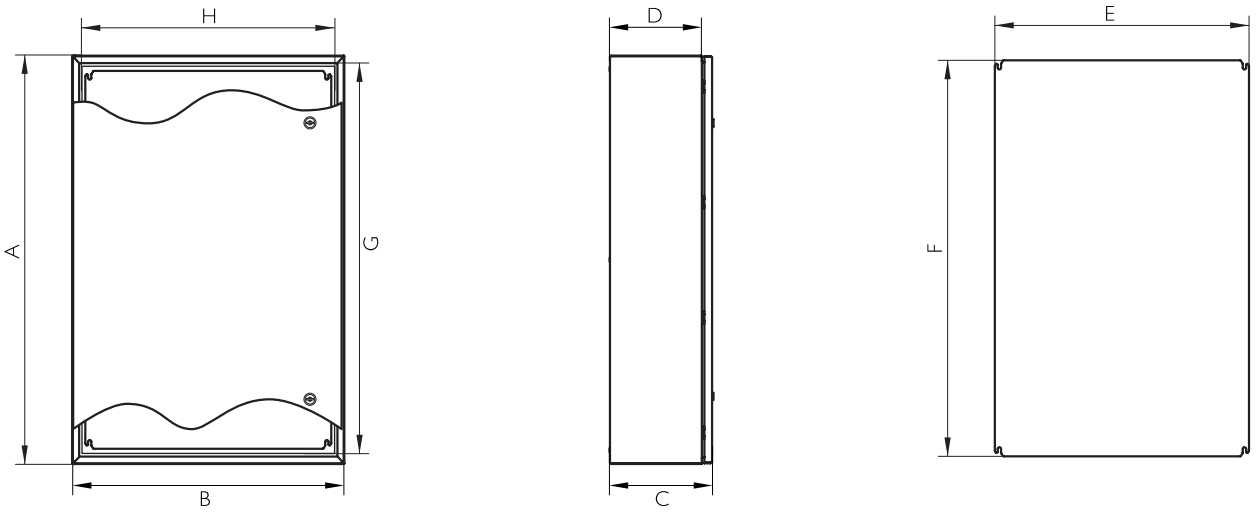

STAINLESS STEEL WALL MOUNTED ENCLOSURES **LUXOR SERIES** IP6K9K

REFERENCES 1 DOOR

REFERENCES			DIMENSIONS (mm)								
BLIND DOOR (x)	POLYCARBONATE DOOR (NO IP6K9K)	POLYCARBONATE DOOR + INSIDE DOOR (NO IP6K9K)	HEIGHT -A-	WIDTH -B-	DEPTH -C-	ACCESS -GxH-	INSIDE DEPTH -D-	MACHINABLE AREA		PLATE MEASURE-MENT -ExF-	WEIGHT (Kg)	VOL. (m^3)
								DOOR	SIDE			
MVAB302015/69	MVAB302015T	MVAB302015TC	300	200	155	260x153	125	220x76	270x125	265x145	4,65	0,01
MVAB383015/69	MVAB383015T	MVAB383015TC	380	300	155	340x253	125	300x176	350x125	345x245	7,68	0,02
MVAB383021/69	MVAB383021T	MVAB383021TC	380	300	210	340x253	180	300x176	350x180	345x245	8,57	0,03
MVAB404021/69	MVAB404021T	MVAB404021TC	400	400	210	360x353	180	320x276	370x180	365x345	11,12	0,04
MVAB504021/69	MVAB504021T	MVAB504021TC	500	400	210	460x353	180	420x276	470x180	465x345	13,51	0,05
MVAB505021/69	MVAB505021T	MVAB505021TC	500	500	210	460x453	180	420x376	470x180	465x445	16,2	0,06
MVAB705021/69	MVAB705021T	MVAB705021TC	700	500	210	660x453	180	620x376	670x180	665x445	21,55	0,08
MVAB604021/69	MVAB604021T	MVAB604021TC	600	400	210	560x353	180	520x276	570x180	565x345	15,74	0,06
MVAB605021/69	MVAB605021T	MVAB605021TC	600	500	210	560x453	180	520x376	570x180	565x445	18,88	0,07
MVAB606021/69	MVAB606021T	MVAB606021TC	600	600	210	560x553	180	520x476	570x180	565x545	22	0,08
MVAB806030/69	MVAB806030T	MVAB806030TC	800	600	300	760x553	270	720x476	770x270	765x545	31,35	0,16
MVAB808030/69	MVAB808030T	MVAB808030TC	800	800	300	760x753	270	720x676	770x270	765x745	41,5	0,21
MVAB108030/69	MVAB108030T	MVAB108030TC	1000	800	300	960x753	270	920x676	970x270	965x745	50,69	0,26
MVAB128030/69	MVAB128030T	MVAB128030TC	1200	800	300	1160x753	270	1120x676	1170x270	1165x745	59,47	0,31
MVAB101030/69	MVAB101030T	MVAB101030TC	1000	1000	300	960x953	270	920x876	970x270	965x945	61,17	0,32
*MVAC121030/69	MVAC121030T	MVAC121030TC	1200	1000	300	1090x890	275	1000x790	1170x265	1070x870	78,82	0,46
*MVAC101230/69	MVAC101230T	MVAC101230TC	1000	1200	300	890x1090	275	800x990	970x265	870x1070	78,76	0,39
*MVAC121230/69	MVAC121230T	MVAC121230TC	1200	1200	300	1000x1000	275	1000x990	1170x265	1070x1070	92,09	0,39

Version UL approval Nema 4x, 12, 3r and 1	Add "UL" to the reference Ex."MVAB302015UL"

*Tribeca design

Separation depth plate 20 mm

10 YEARS
STAINLESS ANTICORROSIVE **GUARANTEE**

5 YEARS
MECHANICAL PARTS **GUARANTEE**

REFERENCES 2 DOORS

REFERENCES	DIMENSIONS (mm)							
2 BLINDS DOORS (x)	HEIGHT - A -	WIDTH - B -	DEPTH - C -	ACCESS - GxH -	INSIDE DEPTH - D -	MACHINABLE AREA		PLATE MEASUREMENT -GxH-
						DOOR	SIDE	
MVAB806030D/69	800	600	300	746x546	270	720x217.5 / 720x173.5	720x240	740x540
MVAB808030D/69	800	800	300	746x746	270	720x317.5 / 720x273.5	720x240	740x740
MVAB108030D/69	1000	800	300	946x746	270	920x317.5 / 920x273.5	970x240	940x740
MVAB128030D/69	1200	800	300	1146x746	270	1120x317.5 / 1120x273.5	1170x240	1140x740
MVAB101030D/69	1000	1000	300	946x946	270	920x417.5 / 920x373.5	970x240	940x940
MVAB121030D/69	1200	1000	300	1146x946	270	1120x617.5 / 1120x573.5	1170x240	1140x940
MVAB121230D/69	1200	1200	300	1146x1146	270	1120x717.5 / 1120x673.5	1170x240	1140x1140

Option: Polycarbonate door (no IP6K9K)	Add "T" to the reference. Ex "MVAB806030DT"
Option: Polycarbonate door + Inside door (no IP6K9K)	Add "TC" to the reference. Ex "MVAB806030DTC"
Version UL approval Nema 4x, 12, 3r and 1	Add "UL" to the reference. Ex "MVAB806030DUL"
Option: IP66	Add "66" to the reference. Ex "MVAB806030D66"

Separation depth plate 20 mm

STAINLESS STEEL FREE-STANDING ENCLOSURE

TRIBECA SERIES IP6K9K



Example

Maximum Working Width for your Assemblies IP6K9K

Tribeca Series IP6K9K compact enclosures with improved design, robust, easy opening by rotating handle and four point lock, easy placement on the floor, flexible, maximum working width and a unique design in stainless steel AISI 304L. Available in one or two doors, 120° swivel, easily removable. We recommend cable entry hollow base.

FOR MORE INFORMATION CLICK HERE



APPLICATIONS

- Especially designed for automatic positioning, machine control meters and where smartness, quality and durability are necessary.
- Electrical control panel approved for food, chemical, pharmaceutical processing centres, telecommunications and outdoor use because of its advantages of durability and chemical resistance.

NORMATIVE

- To IP66 (IP66 two doors) Norm IEC 60529.
- ISO 20653 - IP6K9K.
- DIN EN ISO 14159 Machine safety – hygiene requirements pertaining to the design of machinery.
- Machinery Directive 2006/42/EC. Food machinery and cosmetic or pharmaceutic production.
- EHEDG Guideline Hygienic Design doc.13 machinery for open processes.
- DIN EN 1672-2:2006 for food industry machinery.
- Maximum IK10 resistance Norm IEC 62262.
- Manufactured following EU low voltage ruling 2014/35/UE.
- Materials intended to come into contact with food EC 1935/2004.
- RoHs compliant.
- UL approval Nema 4x, 12, 3r, 1. Nº File E342220.
- Maximum voltage 1000 V.
- Temperature resistant: -40°C +100°C (short time +160°C).
- Option silicone gasket: from –60°C to +180°C (short time up to +350°C).

OPTIONS

- Custom made based on your needs.
- With a choice of two doors (from 1200mm width).
- Plinths at base.
- Castors.
- Metal legs.
- Clear polycarbonate door or transparent safety glass door (no IP6K9K).
- Manufactured in stainless steel AISI 316L EN 14404.
- Mounting plate insulator (bakelite) or stainless steel.
- EMC version according to 2014/30/UE of electromagnetic compatibility.
- Option painted galvanized steel finish in RAL 7035 or another color.

FEATURES

- Supplied with protective film to prevent scratches and abrasions during handling.
- The manufacture of the stainless steel monobloc allows sealing and maximum resistance.
- A drainage channel prevents liquid contact with the polyurethane gasket and with concealed hinges.
- 100% Stainless Steel, from handle to opening system.
- Standard electrical panel with handle lock (four locking points) and concealed stainless steel hinges.
- Delvalle made to order in any size to suit your needs and all drilling holes, both for the door and the enclosure included.
- Distribuited load 600 kg.

STAINLESS STEEL FREE-STANDING ENCLOSURE **TRIBECA SERIES** IP6K9K

PLAN

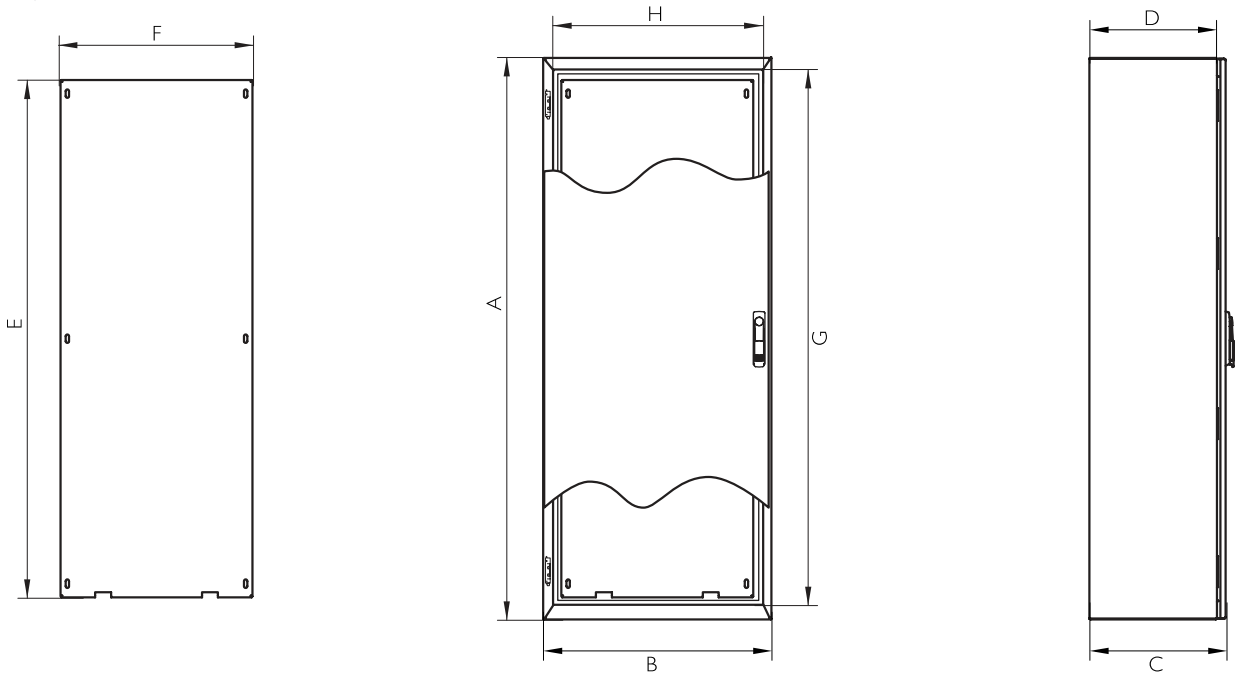

10 YEARS
STAINLESS ANTICORROSIVE **GUARANTEE**

5 YEARS
MECHANICAL PARTS **GUARANTEE**

REFERENCES I DOOR

REFERENCES		DIMENSIONS (mm)									
BLIND DOOR	POLYCARBONATE DOOR (NO IP6K9K)	HEIGHT -A-	WIDTH -B-	DEPTH -C-	ACCESS -GxH-	INSIDE DEPTH -D-	MACHINABLE AREA		PLATE MEASUREMENT -ExF-	WEIGHT (Kg)	VOLUME (m^3)
							DOOR	SIDE			
MVAC166040/69	MVACT166040	1650	600	400	1540x490	375	1524.8x474.8	1640x365	1520x470	70,9	0,42
MVAC168040/69	MVACT168040	1650	800	400	1540x690	375	1524.8x674.8	1640x365	1520x670	93,25	0,56
MVAC161040/69	MVACT161040	1650	1000	400	1540x890	375	1524.8x874.8	1640x365	1520x870	111,3	0,70
MVAC186040/69	MVACT186040	1800	600	400	1690x490	375	1674.8x474.8	1790x365	1670x470	76,61	0,46
MVAC188040/69	MVACT188040	1800	800	400	1690x690	375	1600x600	1790x365	1670x670	100,76	0,61
MVAC188050/69	MVACT188050	1800	800	500	1690x690	475	1600x600	1790x465	1670x670	107,21	0,76
MVAC181040/69	MVACT186050	1800	1000	400	1690x890	375	1600x800	1790x365	1670x870	120,24	0,76
MVAC181050/69	MVACT188050	1800	1000	500	1690x890	475	1600x800	1790x465	1670x870	127,18	0,95
MVAC206040/69	MVACT206040	2000	600	500	1890x490	475	1874.8x474.8	1990x465	1870x470	84,68	0,51
MVAC208040/69	MVACT208040	2000	800	400	1890x690	375	1800x600	1990x365	1870x670	111,19	0,68
MVAC208050/69	MVACT208050	2000	800	500	1890x690	475	1800x600	1990x465	1870x670	118,13	0,85
MVAC201040/69	MVACT201040	2000	1000	400	1890x890	375	1800x800	1990x365	1870x870	132,58	0,85
MVAC201050/69	MVACT201050	2000	1000	500	1890x890	475	1800x800	1990x465	1870x870	140	1,05

Version: Normative UL	Add "UL" to the reference. Ex "MVAC166040 UL"

Separation depth plate 20mm

STAINLESS STEEL FREE-STANDING ENCLOSURE **TRIBECA SERIES** IP6K9K



Tribeca with insulation

Tribeca without insulation



REFERENCES 2 DOORS

REFERENCES		DIMENSIONS (mm)									
BLIND DOOR	POLYCARBONATE DOOR (NO IP6K9K)	HEIGHT -A-	WIDTH -B-	DEPTH -C-	ACCESS -GxH-	INSIDE DEPTH -D-	MACHINABLE AREA		PLATE MEASUREMENT -ExF-	WEIGHT (Kg)	VOLUME (m^3)
							DOOR	SIDE			
MVAC161240/69	MVACT161240	1650	1200	400	1540x1090	375	1524.8x464.2 / 1524.8x497.2	1640x365	1520x1070	129,33	0,84
MVAC181240/69	MVACT181240	1800	1200	400	1690x1090	375	1674.8x464.2 / 1674.8x497.2	1790x365	1670x1070	139,7	0,91
MVAC181250/69	MVACT181250	1800	1200	500	1690x1090	475	1674.8x464.2 / 1674.8x497.2	1790x465	1670x1070	147,12	1,14
MVAC201240/69	MVACT201240	2000	1200	400	1890x1090	375	1874.8x464.2 / 1874.8x497.2	1990x365	1870x1070	149,61	1,02
MVAC201250/69	MVACT201250	2000	1200	500	1890x1290	475	1874.8x464.2 / 1874.8x497.2	1990x465	1870x1070	157,51	1,26
MVAC201440/69	MVACT201440	2000	1400	400	1890x1290	375	1874.8x664.2 / 1874.8x697.2	1990x365	1870x1270	169,38	1,18
MVAC201450/69	MVACT201450	2000	1400	500	1890x1290	475	1874.8x664.2 / 1874.8x697.2	1990x465	1870x1270	177,76	1,47
MVAC201640/69	MVACT201640	2000	1600	400	1890x1490	375	1810x605 / 1810x605	1990x365	1870x1470	189,12	1,35
MVAC201650/69	MVACT201650	2000	1600	500	1890x1490	475	1810x605 / 1810x605	1990x465	1870x1470	197,99	1,68

Version: Normative UL	Add "UL" to the reference. Ex "MVAC166040 UL"

Separation depth plate 20mm



Tribeca with double doors



MODULAR STAINLESS STEEL ENCLOSURE

TITAN SERIES IP6K9K



Example

Perfect Sealing Thanks to Gaskets Used in the Joints IP6K9K

Modular stainless steel enclosure Titan Series IP6K9K, stylish and corrosion resistant, completely adaptable, flexible, for food, petrochemical, pharmaceutical industries, electrical use, which require smartness hygiene, sealing and long life.
Our system is a closed profile in stainless steel steel, welded, give greater strength and top quality. The doors sides and rear are hinged and easily removable with 120° opening, thanks to assembly with screws.
All this is achieved with a perfect assembly system where after the construction requested modules are coupled with screws. But the best advantage of this cabinet is the versatility it provides, in Addition to the large number of customized accessories.
A perfect assembly system that gives the most consistent cabinet and facilitates the assembly of other components, along with an elegant finish make this the Titan stainless steel, one of the most popular enclosures.

FOR MORE INFORMATION CLICK HERE



MODULAR STAINLESS STEEL ENCLOSURE **TITAN SERIES** IP6K9K

APPLICATIONS

Especially designed for maximum flexibility in use. Thanks to its versatility it can be used in the food and pharmaceuticals industries, where hygiene is essential, as in petrochemical, electrical, industries where total sealing is essential and also in general industrial environments always offering a long life.

10 YEARS
STAINLESS ANTICORROSIVE **GUARANTEE**

5 YEARS
MECHANICAL PARTS **GUARANTEE**

NORMATIVE

- IP66 Norm EN 62208 / EN 60529.
- ISO 20653 - IP6K9K.
- DIN EN ISO 14159 Machine safety – hygiene requirements pertaining to the design of machinery.
- Machinery Directive 2006/42/EC. Food machinery and cosmetic or pharmaceutic production.
- EHEDG Guideline Hygienic Design doc.13 machinery for open processes.
- DIN EN 1672-2:2006 for food industry machinery.
- Maximum IK10 resistance Norm IEC 62208 and EN 50102.
- Manufactured following EU low voltage ruling 2014/35/UE.
- RoHS Directive 2011/65/UE compliant.
- UL approval Nema 4x, 12, 3r, 1. N° File E342220.
- Maximum voltage 1000 V.
- Temperature resistant: -40°C +100°C (short time +160°C).
- Option silicone gasket: from -60°C to +180°C (short time up to +350°C)

OPTIONS

- Custom made based on your needs.
- With the possibility to join several modules.
- Plinths at base. Swing rack.
- Eyebolt (not included in standard model).
- All types of ventilation.
- Cable entry cover at base.
- Metal legs and wheels.
- Transparent polycarbonate door, with tempered glass or with safety glass (no IP6K9K).
- Finished in textured paint RAL on request.
- Mounting plate insulator (bakelite) or painted steel.
- Manufactured in stainless steel AISI 316L.
- EMC version according to 2014/30/UE of electromagnetic compatibility.
- Option painted galvanized steel finish in RAL 7035 or another color.

ADVANTAGES

- Broad assembly area and great accessibility.
- Endless choices, modules and measurements.
- Delivery soldier, which gives it great strength.
- Side rear, top and bottom panels, easily removable.
- 100% stainless steel from handle to opening system.
- Door opens to 120°.
- Standard with three or four width points lock.
- Perfect sealing thanks to gaskets used in the joints.
- Delvalle supplies any measurements required including custom built holes and cut outs both for the door and enclosure.
- Distribuited load 1000 kg.

MODULAR STAINLESS STEEL ENCLOSURE **TITAN SERIES** IP6K9K

PLAN

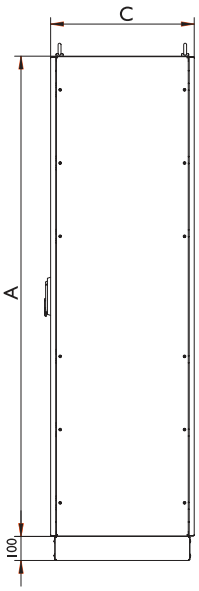

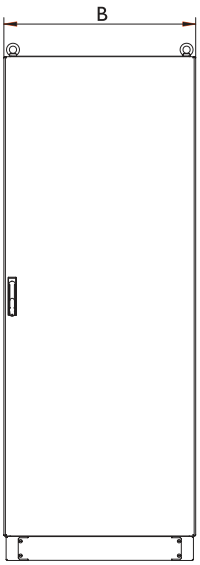

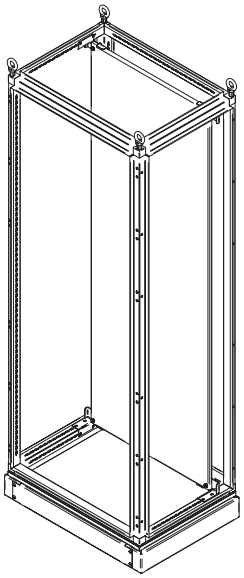

REFERENCES 2 DOORS

REFERENCES	DIMENSIONS (mm)				
BLIND DOOR	HEIGHT -A-	WIDTH -B-	DEPTH -C-	WEIGHT (Kg)	VOLUME (m^3)
MVAF181050/2/69	1800	1000	500	166,76	0,95
MVAF181060/2/69	1800	1000	600	175,26	1,13
MVAF201040/2/69	2000	1000	400	165,96	0,85
MVAF201050/2/69	2000	1000	500	174,73	1,05
MVAF201240/2/69	2000	1200	400	195,03	1,02
MVAF201250/2/69	2000	1200	500	204,48	1,26
MVAF201260/2/69	2000	1200	600	213,94	1,51
MVAF201280/2/69	2000	1200	800	255,95	2,19
MVAF221260/2/69	2200	1200	600	229,97	1,65
MVAF221280/2/69	2200	1200	800	255,95	2,19
MVAF221080/2/69	2200	1000	800	229,84	1,83
Version UL	Add "UL" to the reference. Ex: "MVAF126040UL"				

Separation depth plate 20mm

10 YEARS
STAINLESS ANTICORROSIVE **GUARANTEE**

5 YEARS
MECHANICAL PARTS **GUARANTEE**





MODULAR STAINLESS STEEL ENCLOSURE **TITAN SERIES** IP6K9K

REFERENCES 1 DOOR

REFERENCES	DIMENSIONS (mm)				
BLIND DOOR	HEIGHT -A-	WIDTH -B-	DEPTH -C-	WEIGHT (Kg)	VOLUME (m^3)
MVAF126040/69	1200	600	400	79,75	0,31
MVAF126060/69	1200	600	600	91,51	0,46
MVAF126080/69	1200	600	800	107,1	0,61
MVAF128040/69	1200	800	400	98,23	0,41
MVAF128060/69	1200	800	600	110,97	0,61
MVAF128080/69	1200	800	800	127,51	0,81
MVAF146040/69	1400	600	400	87,81	0,36
MVAF146060/69	1400	600	600	101	0,53
MVAF146080/69	1400	600	800	118,01	0,71
MVAF148040/69	1400	800	400	112,63	0,48
MVAF148060/69	1400	800	600	123,12	0,71
MVAF148080/69	1400	800	800	141,09	0,94
MVAF166040/69	1600	600	400	98,14	0,41
MVAF166060/69	1600	600	600	111,41	0,61
MVAF166080/69	1600	600	800	129,82	0,81
MVAF168040/69	1600	800	400	121,01	0,55
MVAF168060/69	1600	800	600	135,25	0,81
MVAF168080/69	1600	800	800	154,61	1,07
MVAF161040/69	1600	100	400	139,78	0,68
MVAF161060/69	1600	100	600	154,98	1,01
MVAF161080/69	1600	100	800	175,31	1,34
MVAF161240/69	1600	120	400	158,53	0,81
MVAF161260/69	1600	120	600	174,69	1,21
MVAF161280/69	1600	120	800	195,98	1,60
MVAF186040/69	1800	600	400	106,65	0,46
MVAF186050/69	1800	600	500	113,98	0,57
MVAF186060/69	1800	600	600	121,32	0,69
MVAF186080/69	1800	600	800	141,16	0,91
MVAF188040/69	1800	800	400	131,75	0,61
MVAF188050/69	1800	800	500	139,56	0,76
MVAF188060/69	1800	800	600	147,38	0,91
MVAF188080/69	1800	800	800	168,19	1,21
MVAF181040/69	1800	1000	400	139,78	0,68
MVAF181050/69	1800	1000	500	160,56	0,95
MVAF181060/69	1800	1000	600	168,86	1,13
MVAF181080/69	1800	1000	800	190,63	1,50
MVAF181240/69	1800	1200	400	172,76	0,91
MVAF181250/69	1800	1200	500	181,53	1,14
MVAF181260/69	1800	1200	600	190,31	1,36
MVAF181280/69	1800	1200	800	213,05	1,80
MVAF203050/69	2000	300	500	90,82	0,33
MVAF203060/69	2000	300	600	97,9	0,39
MVAF203080/69	2000	300	800	117,73	0,52
MVAF204050/69	2000	400	500	101,95	0,43
MVAF204060/69	2000	400	600	109,27	0,51
MVAF206040/69	2000	600	400	116,39	0,51
MVAF206050/69	2000	600	500	124,2	0,64
MVAF206060/69	2000	600	600	132,02	0,76
MVAF206080/69	2000	600	800	153,28	1,01
MVAF208040/69	2000	800	400	143,7	0,68
MVAF208050/69	2000	800	500	152	0,85
MVAF208060/69	2000	800	600	160,28	1,01
MVAF208080/69	2000	800	800	182,51	1,34
MVAF208010/69	2000	800	100	199,58	1,67
MVAF201040/69	2000	1000	400	165,96	0,85
MVAF201050/69	2000	1000	500	174,73	1,05
MVAF201060/69	2000	1000	600	183,52	1,26
MVAF201080/69	2000	1000	800	206,7	1,67
MVAF226060/69	2200	600	600	141,93	0,84
MVAF226080/69	2200	600	800	164,63	1,11
MVAF228060/69	2200	800	800	172,38	1,11
MVAF228080/69	2200	800	800	196,04	1,47
MVAF221060/69	2200	1000	600	197,36	1,38
MVAF221080/69	2200	1000	800	221,97	1,83

Version UL	Add "UL" to the reference. Ex:"MVAF126040UL"

Separation depth plate 20mm





PUSH-BUTTON AND JUNCTION STAINLESS STEEL BOX

GEO SERIES IP6K9K



Examples



Strength, Durability and Long Life IP6K9K

Geo Series IP6K9K push-button and junction boxes, elegant watertight boxes made wholly in finely polished AISI 304L EN-14306 stainless steel available in plain or bored covers (22.5).
Specially designed for placing push-buttons.

FOR MORE INFORMATION CLICK HERE



APPLICATIONS

Especially designed and officially approved for food, chemical, pharmaceutical, transformer and telecommunication industries for use both inside and outside, due to the advantages of high resistance to chemical agents and durability.



STAINLESS ANTICORROSIVE **GUARANTEE**



MECHANICAL PARTS **GUARANTEE**

OPTIONS

- Custom made based on your needs.
- Manufactured in stainless steel AISI 316L EN 14404.
- Metal legs.
- Unloosable screws.
- Finished in textured paint RAL on request.
- Mounting plate insulator (bakelite) or painted steel.
- EMC version according to 2014/30/UE of electromagnetic compatibility.
- Option painted galvanized steel finish in RAL 7035 or another color.

NORMATIVE

- IP66 Norm IEC 60529 (IP67 on request).
- ISO 20653 - IP6K9K.
- DIN EN ISO 14159 Machine safety – hygiene requirements pertaining to the design of machinery.
- Machinery Directive 2006/42/EC. Food machinery and cosmetic or pharmaceutic production.
- EHEDG Guideline Hygienic Design doc.13 machinery for open processes.
- DIN EN 1672-2:2006 for food industry machinery.
- Maximum IK10 resistance Norm IEC 62262.
- Manufactured following EU low voltage ruling 2014/35/UE
- RoHS Directive 2011/65/UE compliant.
- UL approval Nema 4x, 12, 3r, 1. N° File E342220.
- Maximum voltage 1000 V.
- Temperature resistant: -40°C +100°C (short time +160°C).
- Option silicone gasket: from -60°C to +180°C (short time up to +350°C).

ADVANTAGES

- Strength, durability and long life.
- Special built to measure solutions.
- 100% stainless steel.
- Wide variety of accessories.
- Stainless steel AISI 304L or AISI 316L.
- Unlimited options.
- Supplied with protective film which prevents scratches and abrasions during handling.
- The manufacture of the stainless steel monobloc allows sealing and ensures maximum resistance.
- Water channel to prevent liquids coming into contact with the polyurethane seal and hidden hinges giving perfect sealing.
- Delvalle supplies any measurements required including custom built holes and cut outs both for the door and enclosure.
- Up to IP6K9K.

PUSH-BUTTON AND JUNCTION STAINLESS STEEL BOX **GEO SERIES** IP6K9K

PLAN

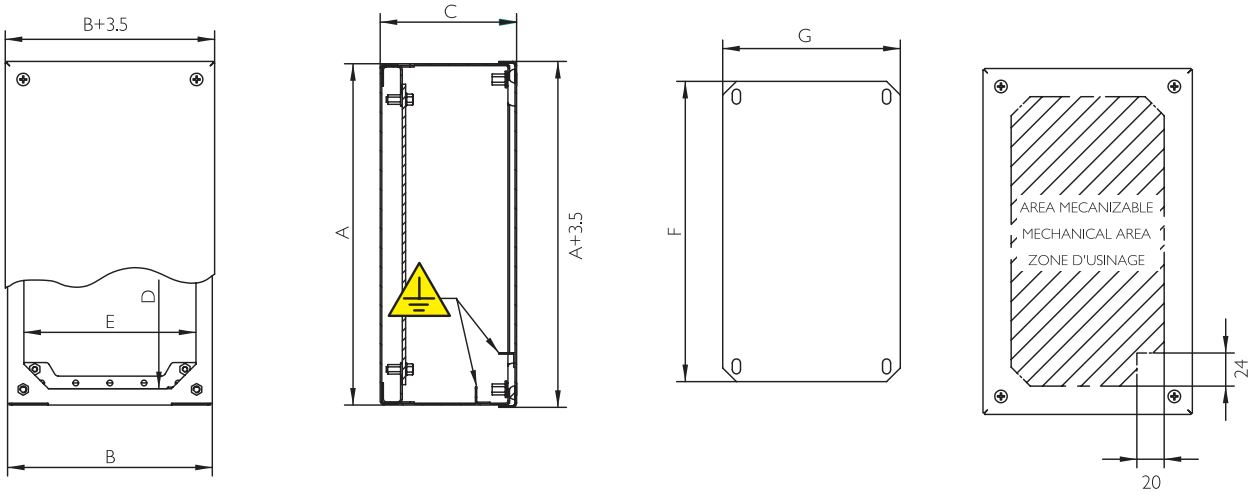

10 YEARS
STAINLESS ANTICORROSIVE **GUARANTEE**

5 YEARS
MECHANICAL PARTS **GUARANTEE**



REFERENCES

REFERENCES		COVER	DIMENSIONS (mm)							
(x) BLIND COVER	PERFORATED COVER	Nº HOLES	HEIGHT - A -	WIDTH - B -	DEPTH - C -	ACCESS - DxE -	MACHINABLE AREA	PLATE MEASUR. - FxG -	WEIGHT (Kg)	VOLUME (m^3)
MVCB909080/69	MVCB909080P/69	1	90	90	80	66x66	48x48	60x70	0,68	0,001
MVCB149080/69	MVCB149080P/69	2	140	90	80	116x66	98x48	110x70	0,92	0,001
MVCB209080/69	MVCB209080P/69	3	200	90	80	176x66	158x48	170x70	1,2	0,002
MVCB269012/69	MVCB269012P/69	4	260	90	120	236x66	218x48	230x70	1,75	0,004
MCVB289080/69	MCVB289080P/69	5	280	90	80	256x66	238x48	250x70	1,6	0,002
MVCB101612/69	MVCB101612P/69	3	100	160	120	76x136	58x118	70x140	1,29	0,003
MVCB161612/69	MVCB161612P/69	4	160	160	120	136x136	118x118	130x140	1,81	0,004
MVCB202012/69	MVCB202012P/69	6	200	200	120	176x176	158x158	170x180	2,53	0,006
MVCB202515/69	MVCB202515P/69	12	200	250	150	176x226	158x208	170x230	3,25	0,009
MVCB252515/69	MVCB252515P/69	16	250	250	150	226x226	208x208	220x230	3,87	0,012
MVCB203015/69	MVCB203015P/69	15	200	300	150	176x276	158x258	170x280	3,75	0,011
MVCB303015/69	MVCB303015P/69	25	300	300	150	276x276	258x258	270x280	5,16	0,016
MVCB304015/69	MVCB304015P/69	35	300	400	150	276x376	258x358	270x380	6,64	0,022
MVCB404015/69	MVCB404015P/69	49	400	400	150	376x376	358x358	370x380	8,41	0,028

(x) Version: Normative UL	Add "UL" a la referencia Ej. "MVCB909080UL"

STAINLESS STEEL CONSOLE **RIVIERA SERIES** IP6K9K



Examples



Strength and Durability
IP6K9K

Riviera Console Series IP6K9K, elegant, functional consoles manufactured in nely polished AISI 304L, EN14306 stainless steel, easily accessed, with a design which allows for IP55 protection in two doors and IP66 for one door maximum resistance of IK10.
Top door with shock absorbers which make opening easier, with dismountable bottom and hidden hinges throughout It comes with a galvanized mounting plate. Its drainage channels ensure liquids don't come into contact with the polyverthone joint sealings. Front door opening to 130° making easy access.

FOR MORE INFORMATION CLICK HERE



STAINLESS STEEL CONSOLE **RIVIERA SERIES** IP6K9K

APPLICATIONS

Oficially approved for food, chemical, pharmaceutical, transformer and telecommunication industries for use both inside and outside, due to its advantages of high resistance to chemical agents and its durability.

10 YEARS
STAINLESS ANTICORROSIVE **GUARANTEE**

5 YEARS
MECHANICAL PARTS **GUARANTEE**

NORMATIVE

- From IP55 to IP66 Norm IEC EN 62208 EN 60529.
- ISO 20653 - IP6K9K.
- DIN EN ISO 14159 Machine safety – hygiene requirements pertaining to the design of machinery.
- Machinery Directive 2006/42/EC. Food machinery and cosmetic or pharmaceutic production.
- EHEDG Guideline Hygienic Design doc.13 machinery for open processes.
- DIN EN 1672-2:2006 for food industry machinery.
- Maximum IK10 resistance Norm IEC 62208 and EN 50102.
- Our electrical panels are built to CE standards 2014/35/UE.
- Comply with rules on materials intended to come into contact with food EC 1935/2004.
- RoHs compliant.
- Maximum voltage 1000V.
- Temperature resistant: -40°C +100°C (short time +160°C).
- Option silicone gasket: from -60°C to +180°C (short time up to +350°C).

OPTIONS

- Custom made based on your needs.
- Plinths/base.
- All types of ventilation and temperature control.
- Cable entry cover in front door.
- Metal leg or wheels.
- Transparent polycarbonate or tempered glass door (no IP6K9K).
- Manufactured in stainless steel AISI 316L.
- Mounting plate insulator (bakelite) or stainless steel.
- EMC version according to 2014/30/UE of electromagnetic compatibility.
- Option painted galvanized steel finish in RAL 7035 or another color.

ADVANTAGES

- Spacious assembly area giving great accessibility.
- Great external strength.
- Door opens to 130°.
- Standard quarter-turn double bit fasteners.
- Perfect sealing thanks to gaskets used in the joints.
- Great versatility, enables its use in almost any eld.
- Delvalle supplies any measurements required including custom built holes and cut outs both for the door and enclosure.
- Wide variety of accessories.
- Top door with shock absorbers.
- Front door opens to 130°.
- Total accessibility.
- Stainless steel AISI 304L or AISI 316L.

STAINLESS STEEL CONSOLE **RIVIERA SERIES** IP6K9K

PLAN

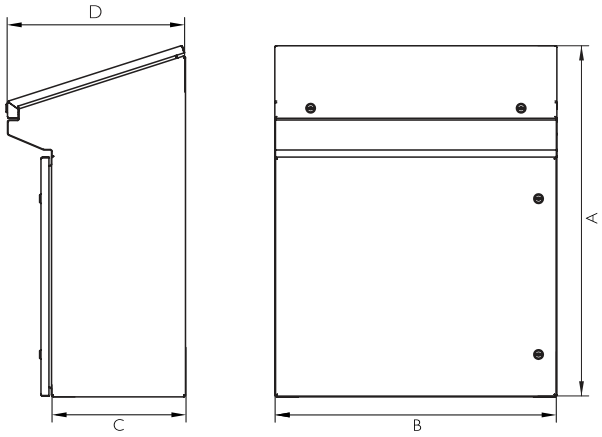

Console
Riviera
2 doors





Console
Riviera
3 doors

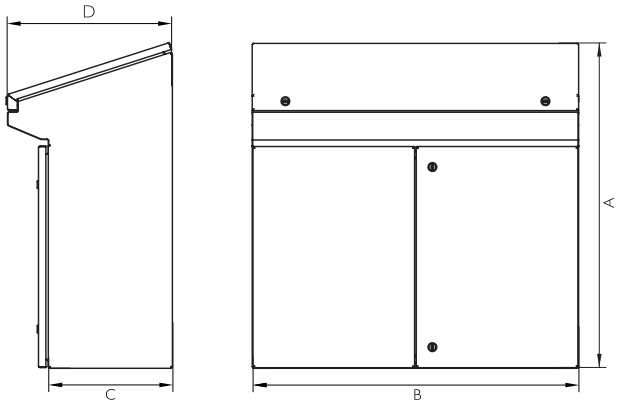

REFERENCES

REFERENCES	DIMENSIONS (mm)				
CONSOLE	Nº DOORS	HEIGHT - A -	WIDTH - B -	DEPTH - C -	DEPTH - D -
MVPA106038/69	2	1000	600	380	500
MVPA108038/69	2	1000	800	380	500
MVPA101038/69	3	1000	1000	380	500
MVPA101238/69	3	1000	1200	380	500
MVPA101438/69	3	1000	1400	380	500
MVPA101638/69	3	1000	1600	380	500

REFERENCES	DIMENSIONS (mm)		
SOCLE	HEIGHT - A -	WIDTH - B -	DEPTH - C -
MVZA106038/69	100	600	380
MVZA206038/69	200	600	380
MVZA108038/69	100	800	380
MVZA208038/69	200	800	380
MVZA101038/69	100	1000	380
MVZA201038/69	200	1000	380
MVZA101238/69	100	1200	380
MVZA201238/69	200	1200	380
MVZA101438/69	100	1400	380
MVZA201438/69	200	1400	380
MVZA101638/69	100	1600	380
MVZA201638/69	200	1600	380

10 YEARS
STAINLESS ANTICORROSIVE **GUARANTEE**

5 YEARS
MECHANICAL PARTS **GUARANTEE**

METRIC STAINLESS STEEL CABLE GLANDS **HYGIENIC SERIES** IP69K

Hygienic glands are fit for passing, pressing and fixing cables between two compartments such as junction boxes, electric enclosures or any cabinet where protection against dust, dirt or water is required.

Made in stainless steel, hygienic glands are a definite solution against dirt and germs. They are the only glands tested according to FDA and EHEDG standards. We have the widest range from M12 to M25 and the highest quality.





- Material: Stainless steel AISI303L (other materials on request)
- Thread: TPE according to FDA guideline 21 CFR 177.2600 (PG and NPT upon request)
- Protection:
  - IP68 (5 bar, 30 min) according EN 60529
  - IP69K extend IEC 60529
- Temperature resistance:
  - -20°C to +100°C
  - -40°C to +150°C short time
- Applications: manufacturing food, clean room technology, biotechnology and chemical industry
- Benefits
  - Smooth finish prevents harmful microorganisms sticking to the surface
  - No threads are exposed. Cleaning of cable glands is easier, faster and less expensive compared to traditional stainless steel cable glands
  - Reliable strain relief due to strain relief element separated from grommet
  - Suitable for high pressure steam cleaning

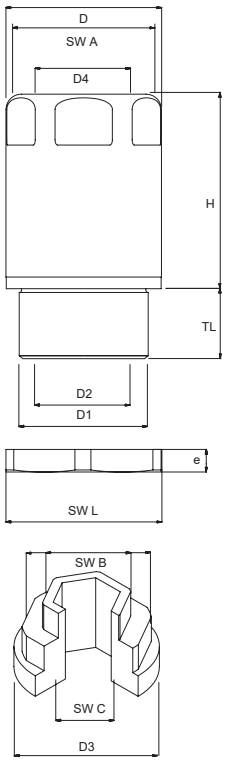

REFERENCES METRIC STAINLESS STEEL HYGIENIC CABLE GLANDS													
REFERENCE CABLE GLANDS + LOCK NUT	THREAD	CABLE CLAMPING RANGE (mm)	CABLE GLANDS DIMENSIONS								LOCK NUT DIMENSIONS		
			SWA (mm)	D (mm)	D1 (mm)	D2 (mm)	D4 (mm)	H (mm)	TL (mm)	CAP TIGHTENING TORQUE NM	SWL (mm)	E (mm)	LOCKNUT TIGHTENING TORQUE NM
HDSS.12	M12x1,5	3,0-6,5	14	15,6	12	7,0	6,8	21,5	6	2,5	15	2,8	6,0
HDSS.16	M16x1,5	5,0-10,0	18	20,2	16	10,5	10,3	28,5	7	4,0	19	3,0	9,0
HDSS.20	M20x1,5	6,0-12,0	22	24,1	20	12,5	12,3	33,0	10	5,0	24	3,5	12,0
HDSS.25	M25x1,5	12,0-17,0	28	30,1	25	17,5	17,3	38	14	6,0	30	4	14,0

REFERENCES METRIC EMC STAINLESS STEEL HYGIENIC CABLE GLANDS													
REFERENCE EMC CABLE GLANDS + LOCK NUT	THREAD	CABLE CLAMPING RANGE (mm)	CABLE GLANDS DIMENSIONS								LOCK NUT DIMENSIONS		
			SWA (mm)	D (mm)	D1 (mm)	D2 (mm)	D4 (mm)	H (mm)	TL (mm)	CAP TIGHTENING TORQUE NM	SWL (mm)	E (mm)	LOCKNUT TIGHTENING TORQUE NM
HDSS.16.EMC	M16x1,5	5,0-10,0	18	20,2	16	10,0	10,3	28,5	7	4,0	19	3,0	9,0
HDSS.20.EMC	M20x1,5	6,0-12,0	22	24,1	20	13,5	12,3	33,0	10	5,0	24	3,5	12,0
HDSS.25.EMC	M25x1,5	12,0-17,0	28	30,1	25	17,5	17,3	38,0	14	6,0	30	4,0	14,0



METRIC STAINLESS STEEL AND NICKEL PLATED CABLE GLANDS IP69K





- Material:
  - Stainless steel AISI 304
  - Stainless steel AISI 316
  - Nickel plated
- Thread: Metric
- Sealing ring: NBR
- Stainless steel or nickel plated lock nut included
- Protection: IP69K
- Temperature resistance:
  - -40°C to +100°C
  - -40°C to +120°C short time
- Supports: Water, dust, salt, acids, alcohol and oils

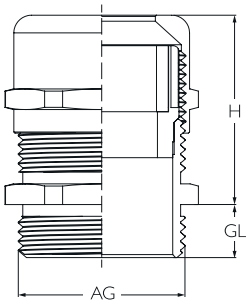

REFERENCES METRIC STAINLESS STEEL CABLE GLANDS								
METRIC STAINLESS STEEL E AISI 304 | AISI 316 CABLE GLANDS	SIZE	CABLE RANGE		THREAD DIAMETER AG (mm)	LENGTH OF THE THREAD GL (mm)	LENGTH OF THE ASSEMBLY GL + H (mm)	(mm)	MINIMUM
		≥	≤					
DVCG.M12	M12x1,5	3	6,5	12	7	19	14	10
DVCG.M16	M16x1,5	4	8	16	8	20	18	10
DVCG.M20	M20x1,5	8	12	20	8	22	22	10
DVCG.M25	M25x1,5	12	16	25	9	27	27	10
DVCG.M32	M32x1,5	15	22	32	10	29	35	5
DVCG.M40	M40x1,5	18	25	40	11	31	40/45	5
DVCG.M48	M48x1,5	25	32	48	11	37	50/52	2
DVCG.M50	M50x1,5	32	38	50	12	37	50/55	2
DVCG.M63	M63x1,5	37	44	63	13	38	64/68	1
DVCG.M75	M75x2	42	52	75	15	42	78	1
DVCG.M80	M80x2	50	62	80	15	45	86/88	1
DVCG.M88	M88x2	60	70	88	15	45	98	1
DVCG.M100	M100x2	70	80	100	15	45	110	1

Option AISI 304	Add ".S4" to the reference. Ex: "DVCG.M12.S4"
Option AISI 316	Add ".S6" to the reference. Ex: "DVCG.M12.S6"

REFERENCES METRIC NICKEL PLATED CABLE GLANDS								
METRIC NICKEL PLATED CABLE GLANDS	SIZE	CABLE RANGE		THREAD DIAMETER AG (mm)	LENGTH OF THE THREAD GL (mm)	LENGTH OF THE ASSEMBLY GL + H (mm)	(mm)	MINIMUM
		≥	≤					
DVCG.M12.ON	M12x1,5	3	6,5	12	7	19	14	50
DVCG.M16.ON	M16x1,5	4	8	16	8	20	18	50
DVCG.M20.ON	M20x1,5	6	12	20	8	22	22	50
DVCG.M25.ON	M25x1,5	12	16	25	9	27	27	50
DVCG.M32.ON	M32x1,5	15	22	32	10	29	35	25
DVCG.M40.ON	M40x1,5	18	25	40	11	31	40/45	10
DVCG.M48.ON	M48x1,5	25	32	48	11	37	50/52	10
DVCG.M50.ON	M50x1,5	32	38	50	12	37	50/55	10
DVCG.M63.ON	M63x1,5	37	44	63	13	38	64/68	10
DVCG.M75.ON	M75x2	42	52	75	15	42	78	5
DVCG.M80.ON	M80x2	50	62	80	15	45	86/88	5
DVCG.M88.ON	M88x2	60	70	88	15	45	98	5
DVCG.M100.ON	M100x2	70	80	100	15	45	110	5

FOR MORE INFORMATION CLICK HERE

CUSTOMIZED ENCLOSURE SOLUTIONS DELVALLE

Delvalle has more than 45 years of experience using the latest technology to implement and obtain the most innovative products on offer to all our customers. Delvalle is an ideal partner, combining an advanced and wide range of products at very competitive prices.

The customized manufacture of all electrical enclosures and cabinets Delvallebox is carry out with the most advanced technical methods and with the precision and consciousness of a craftsman. This makes the difference from competitors and is the best way to gain our customers´ trust.
In Delvallebox we bear in mind that customers perceive the quality very clearly. In every product (for instance, in the cabinets here presented) safety and useful solutions are what customers value most.



STAINLESS STEEL INDUSTRIAL ENCLOSURES



OUTDOOR ELECTRICAL ENCLOSURES



GLOBAL ELECTRICAL SOLUTIONS FOR URBAN AREAS



GALVANIZED STEEL ELECTRICAL ENCLOSURES

Phone +34 945 601 381
comercial@delvalle.es | www.delvallebox.com



SLOPED ROOF
ENCLOSURES - HYGIENIC

ATEX INDUSTRIAL ENCLOSURES



INDUSTRIAL ENCLOSURES IP66, IP67, IP68 AND IP6K9K

Buy direct from manufacturer of custom made IP66, IP67, IP68 and IP6K9K heavy duty industrial and waterproof electrical enclosures AISI 304L and 316L made by standard IEC 60529. Delvalle has tested all sizes and dimensions of waterproof enclosures according to EN 60529:2018. All weather resistant enclosures are more than simply rainproof, they meet a minimum of Nema 4X and IP66, IP67, IP68 and IP69k requirements to ensure your electronics are protected. From Juntion boxes to industrial enclosures, Delvalle weatherproof enclosures offer a wide range of sizes and styles to keep your project waterproof.





CABLE GLANDS FOR
ELECTRICAL ENCLOSURES

CLIMATE CONTROL
COOLING FOR ENCLOSURES



delvalle®

INDUSTRIAL ENCLOSURE SOLUTIONS



Paso del Prao, 6. 01320 Oyón (Álava). Spain
Phone +34 945 601 381
comercial@delvalle.es | **www.delvallebox.com**

Contact us, we will be available at any time