delvalle®

Enclosures & Cabinets for Special Requirements

COMPLETE SOLUTIONS

HYGIENIC DESIGN

ELECTRICAL ENCLOSURES



HD HYGIENIC DESIGN





comercial@delvalle.es | www.delvallebox.com

HYGIENIC DESIGN ELECTRICAL ENCLOSURES 4

JUNCTION BOX - FRESH GEO SERIES IP66 5

ELECTRICAL ENCLOSURE - FRESH TRIBECA SERIES IP66 7

ELECTRICAL ENCLOSURE - FRESH LUXOR SERIES IP66 10

ELECTRICAL ENCLOSURE - HYGIENIC LUXOR SERIES IP66 12

JUNCTION BOX - HYGIENIC GEO SERIES IP66 15

ELECTRICAL ENCLOSURE - HYGIENIC TRIBECA SERIES IP66 17

TERMOELECTRIC - HYGIENIC SERIES IP67 20

METRIC STAINLESS STEEL CABLE GLANDS - HYGIENIC SERIES IP68 21

delvalle®

Paso del Prao, 6 - 01320 Oyón (Álava) Spain
Telf. +34 945 601 381
comercial@delvalle.es | www.delvallebox.com



WE PUT AT YOUR DISPOSAL

We offer over **45 years** providing solutions to demanding customers who require very specific characteristics and behaviour according to the sector and their needs.

WHEREVER YOU GO

We are committed to working closely with our customers, providing them with **exceptional service** and offering an advanced and extensive range of products with very competitive prices.

HIGH STANDARD OF QUALITY AND SERVICES

We only use materials provided by companies who offer the very **highest quality**, suitable and certified products. Our success is due to top quality assurance: ISO 9001, SGS, UL, TÜV, ISO 14000 and ISO45001.

CUSTOMIZE TOTALLY YOUR ENCLOSURE

Our production systems can give custom-made solutions **on demand.** Every colour from RAL chart is available to be personalized. A variety of protection standards thanks to our own painting facilities.

CONTACT US

Confidentiality, reliability & quality

www.delvallebox.com
comercial@delvalle.es
+34 945 601 381

ALSO ONLINE

Please contact our technical sales department

A team of professionals with high experience and ability to solve all your queries



HYGIENIC DESIGN ELECTRICAL ENCLOSURES



Examples



We give a Solution Complete to Sensitive Zones of Contamination

Stainless steel wall enclosure Hygienic Design Electrical Enclosure Luxor Serie, specially designed for the food processing industry, food packaging, ...
An integral sloping roof offers additional protection and leads to self-draining of liquids.
The HD range is the ideal solution for food processinf industry and beverage industries, biotechnical laboratories and pharmaceutical plants.

FOR MORE INFORMATION CLICK HERE



JUNCTION BOX FRESH GEO SERIES IP66



Example

Specially Designed for Placing Push-Buttons

Fresh Geo Series push-button and junction boxes, elegant watertight boxes made wholly in finelypolished AISI 304L EN-14306 stainless steel available in plain or bored covers (22.5).
Specially designed for placing push-buttons.

FOR MORE INFORMATION CLICK HERE

ADVANTAGES

- Unlimited options.
- Supplied with protective film which prevents scratches and abrasions during handling.
- The manufacture of the stainless steel monobloc allows sealing and ensures maximum resistance.
- Water channel to prevent liquids coming into contact with the polyurethane seal and hidden hinges giving perfect sealing.
- Delvalle supplies any measurements required including custom built holes and cut outs both for the door and enclosure.
- Temperature resistant: -40°C +100°C (short time +160°C).
- Option silicone gasket: from -60°C to +180°C (short time up to +350°C).
- Up to IP67or IP69K.

APPLICATIONS

Especially designed and officially approved for food, chemical, pharmaceutical, transformer and telecommunication industries for use both inside and outside, due to the advantages of high resistance to chemical agents and durability.

OPTIONS

- Custom made based on your needs.
- IP67 or IP69K according IEC EN 62208 and EN 60529.
- Manufactured in stainless steel AISI 316L EN 14404.
- Metal legs.
- Unloosable screws.
- Finished in textured paint RAL on request.
- Mounting plate insulator (bakelite) or painted steel.
- EMC version according to 2014/30/UE of electromagnetic compatibility.
- We have hygienic glands on request.
- Option painted galvanized steel finish in RAL 7035 or another color.

Phone +34 945 601 381
comercial@delvalle.es | www.delvallebox.com

JUNCTION BOX FRESH GEO SERIES IP66

NORMATIVE

- IP66 Norm IEC 60529 (IP67 on request).
- DIN 40050-9 - IP69.
- DIN EN ISO 14159 Machine safety – hygiene requirements pertaining to the design of machinery.
- Machinery Directive 2006/42/EC. Food machinery and cosmetic or pharmaceutic production.
- EHEDG Guideline Hygienic Design doc.13 machinery for open processes.
- DIN EN 1672-2:2006 for food industry machinery.
- Maximum IK10 resistance Norm IEC 62262.
- Manufactured following EU low voltage ruling 2014/35/UE.
- RoHS Directive 2011/65/UE compliant.
- UL approval Nema 4x, 12, 3r, 1. N° File E342220.
- Maximum voltage 1000 V.
- Temperature resistant: -40°C +100°C (short time +160°C).
- Option silicone gasket: from -60°C to +180°C (short time up to +350°C).

PLAN

CLICK HERE TO DOWNLOAD THE FILES CAD - PLANS - CERTIFICATES

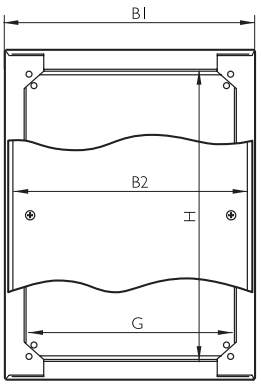

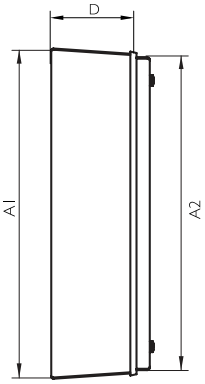

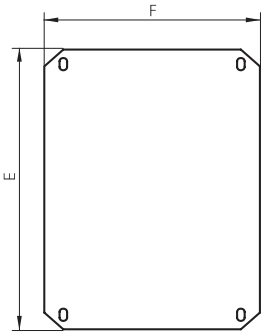

5 YEARS
MECHANICAL PARTS **GUARANTEE**

10 YEARS
STAINLESS ANTICORROSIVE **GUARANTEE**

REFERENCES

REFERENCES		COVER	DIMENSIONS (mm)							
BLIND DOOR	PERFORATED COVER	N° HOLES	HEIGHT - A1 -	WIDTH - B1 -	DEPTH - C -	ACCES - DxE -	MECHANIZABLE AREA	PLATE MEASUREMENT - FxE -	WEIGHT (Kg)	VOLUME (m^3)
MVCBJ909080	MVCBJ909080P	1	90	90	80	66x66	48x48	60x70	0,68	0,001
MVCBJ149080	MVCBJ149080P	2	140	90	80	116x66	98x48	110x70	0,92	0,001
MVCBJ209080	MVCBJ209080P	3	200	90	80	176x66	158x48	170x70	1,2	0,002
MVCBJ269012	MVCBJ269012P	4	260	90	120	236x66	218x48	230x70	1,75	0,004
MVCBJ289080	MVCBJ289080P	5	280	90	80	256x66	238x48	250x70	1,6	0,003
MVCBJ101612	MVCBJ101612P	3	100	160	120	76x136	58x118	70x140	1,29	0,003
MVCBJ161612	MVCBJ161612P	4	160	160	120	136x136	118x118	130x140	1,81	0,004
MVCBJ202012	MVCBJ202012P	6	200	200	120	176x176	158x158	170x180	2,53	0,006
MVCBJ202515	MVCBJ202515P	12	200	250	150	176x226	158x208	170x230	3,25	0,009
MVCBJ252515	MVCBJ252515P	16	250	250	150	226x226	208x208	220x230	3,87	0,011
MVCBJ203015	MVCBJ203015P	15	200	300	150	176x276	158x258	170x280	3,75	0,011
MVCBJ303015	MVCBJ303015P	25	300	300	150	276x276	258x258	270x280	5,16	0,016
MVCBJ304015	MVCBJ304015P	35	300	400	150	276x376	258x358	270x380	6,64	0,022
MVCBJ404015	MVCBJ404015P	49	400	400	150	376x376	358x358	370x380	8,41	0,028
Version: Norm UL			Add "UL" to reference. Ex: "MVCBJ909080UL"							
Version IP69K			Add "/69" to reference. Ex: "MVCBJ909080/69"							

ELECTRICAL ENCLOSURE FRESH TRIBECA SERIES IP66



Example

Special Enclosure for Food Industry

Electrical Fresh Tribeca Series enclosure with a large capacity, specially designed for the food industry.
No openings, hinges, where bacteria could lie. Easy opening by rotating handle and four point lock, easy placement on the floor, flexible, maximum working width.
Moreover the inclination of the roof prevents objects being placed on the surface and our vertical electro polished finish helps repel liquids and prevent virus and bacteria building up on the surface.

FOR MORE INFORMATION CLICK HERE



ELECTRICAL ENCLOSURE FRESH TRIBECA SERIES IP66

APPLICATIONS

Especially designed for the food industry and sterile rooms, wineries, dairies and take away food outlets or any other place where cleanliness is essential as well as total absence of dust, dirt and bacteria.

NORMATIVE

- IP66 (IP55 two doors) by request. Norm IEC 60529.
- DIN 40050-9 - IP69.
- Maximum IK10 resistance Norm IEC 62262.
- EC 1935/2004 rule compliant for materials intended to come into contact with food.
- DIN EN ISO 14159 Machine safety – hygiene requirements pertaining to the design of machinery.
- Machinery Directive 2006/42/EC (previously 89/37/EC) Food machinery and cosmetic or pharmaceutic production.
- EHEDG Guideline Hygienic Design doc.13 machinery for open processes.
- DIN EN 1672-2:2006 for food industry machinery.
- Manufactured following EU low voltage ruling 2014/35/UE.
- Compliant RoHS Directive.
- UL approval Nema 4x, 12, 3r, 1. Nº File E342220.
- Maximum voltage 1000 V.
- Temperature resistant: -40°C +100°C (short time +160°C).
- Option silicone gasket: from -60°C to +180°C (short time up to +350°C).

OPTIONS

- Custom made based on your needs.
- IP69K according EN 60529.
- Option painted galvanized steel finish in RAL 7035 or another color.
- With a choice of two doors (from 1200 mm width).
- Plinths at base.
- Castors.
- Metal legs.
- Transparent polycarbonate door or transparent safety glass door (no IP69K).
- Manufactured in stainless steel AISI 316L. EN 14404.
- Mounting plate insulator (bakelite) or stainless steel.
- We have hygienic glands on request.

ADVANTAGES

- Supplied wrapped in protective film which prevents scratches and abrasions during handling.
- The monobloc manufacture gives total sealing and maximum resistance.
- No openings where bacteria could lie.
- With electro-polished finish that helps to slide the liquid and waterproof seal that prevents dirt and bacteria deposits.
- 100% stainless steel, from handle to opening system.
- 120º door opening. Standard opening to the left. Specify if you need opening to the right.
- Standard electrical panel and handle lock with four locking points and concealed stainless steel hinges.
- Delvalle supplies any measurements required including custom built holes and cut outs both for the door and enclosure.
- Distribuited load 600 Kg.

ELECTRICAL ENCLOSURE FRESH TRIBECA SERIES IP66

PLAN

CLICK HERE TO DOWNLOAD
THE FILES CAD - PLANS - CERTIFICATES

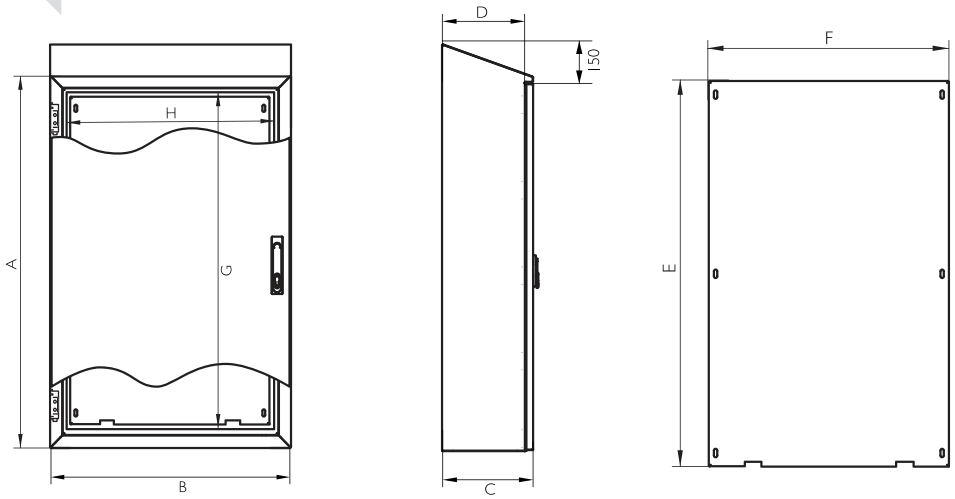

5 YEARS
MECHANICAL PARTS
GUARANTEE

10 YEARS
STAINLESS
ANTICORROSIVE
GUARANTEE

REFERENCES 1 DOOR

REFERENCES	DIMENSIONS (mm)								
BLIND DOOR	HEIGHT - A -	WIDTH - B -	DEPTH - C -	INSIDE HEIGHT - G -	INSIDE WIDTH - H -	INSIDE DEPTH - D -	PLATE MEASUREMENT -ExF-	WEIGHT (Kg)	VOLUME (m^3)
MVACJJ166040	1650	600	400	1390	490	375	1520x470	70,9	0,42
MVACJ168040		800			690		1520x670	93,25	0,56
MVACJ161040		1000			890		1520x870	111,3	0,70
MVACJ186040	1800	600		1540	490		1670x470	76,61	0,46
MVACJ186050			500			475		84,69	0,57
MVACJ188040		800	400		690	375	1670x670	100,76	0,61
MVACJ188050			500			475		107,21	0,76
MVACJ181040		1000	400		890	375	1670x870	120,24	0,76
MVACJ181050			500			475		127,18	0,95
MVACJ206040	2000	600	400	1740	490	375	1870x470	84,68	0,51
MVACJ208040		800			690		1870x670	111,19	0,68
MVACJ208050			500			475		118,13	0,85
MVACJ201040		1000	400		890	375	1870x870	132,58	0,85
MVACJ201050			500			475		140	1,05
Version: Norm UL				Add "UL" to reference. Ex: "MVACJ166040UL"					
Version IP69K				Add "/69" to reference. Ex: "MVACJ166040/69"					



Separation depth plate 20mm

REFERENCES 2 DOORS

REFERENCES	DIMENSIONS (mm)								
BLIND DOOR	HEIGHT - A -	WIDTH - B -	DEPTH - C -	INSIDE HEIGHT - G -	INSIDE WIDTH - H -	INSIDE DEPTH - D -	PLATE MEASUREMENT -ExF-	WEIGHT (Kg)	VOLUME (m^3)
MVACJ161240	1650	1200		1390	1090	375	1520x1070	129,33	0,84
MVACJ181240	1800	1200	400	1540	1090		1670x1070	139,7	0,91
MVACJ181250			500			475		147,12	1,14
MVACJ201240	2000	1200	400	1740	1090	375	1870x1070	149,61	1,01
MVACJ201250			500			475		157,51	1,26
MVACJ201440		1400	400		1290	375	1870x1270	169,38	1,18
MVACJ201450			500			475		177,76	1,47
MVACJ201640		1600	400		1490	375	1870x1470	189,12	1,35
MVACJ201650			500			475		197,99	1,68
Version: Norm UL				Add "UL" to reference. Ex: "MVACJ166040UL"					
Version IP69K				Add "/69" to reference. Ex: "MVACJ166040/69"					



Separation depth plate 20mm

Phone +34 945 601 381
comercial@delvalle.es | www.delvallebox.com

ELECTRICAL ENCLOSURE FRESH LUXOR SERIES IP66



Example

Monobloc Manufacture Gives Total Sealing and Maximum Resistance

Electrical Hygienic Enclosure Fresh Series, specially designed for the food industry.
No openings, hinges, where bacteria could lie but robust and easy lock opening with a big space inside to allow easy working.
Moreover the inclination of the roof prevents objects being placed on the surface and our vertical electro polished finish helps repel liquids and prevent virus and bacteria building up on the surface.

FOR MORE INFORMATION CLICK HERE

APPLICATIONS

Especially designed for the food industry and sterile rooms, wineries, dairies and take away food outlets or any other place where cleanliness is essential as well as total absence of dust, dirt and bacteria.

OPTIONS

- Custom made based on your needs.
- IP69K according EN 60529.
- Option painted galvanized steel finish in RAL 7035 or another color.
- Also made with two doors (from 800x600).
- Plinths at base. Metal legs.
- Transparent polycarbonate door (no IP69K).
- Manufactured in stainless steel AISI 316L.
- Mounting plate insulator (bakelite) or sst.

ADVANTAGES

- Supplied wrapped in protective film which prevents scratches and abrasions during handling.
- The monobloc manufacture gives total sealing and maximum resistance.
- No openings where bacteria could lie.
- 120º door opening. Standard opening to the left. Specify if you need opening to the right.
- With electro-polished finish that helps dispel liquids and waterproof seal that prevents dirt and bacteria deposits.
- Delvalle supplies any measurements required including custom built holes and cut outs both for the door and enclosure.

ELECTRICAL ENCLOSURE FRESH LUXOR SERIES IP66

NORMATIVE

- IP66 Norm IEC 60529.
- DIN 40050-9 - IP69.
- Maximum IK10 resistance Norm IEC 62262.
- EC 1935/2004 rule compliant for materials intended to come into contact with food.
- DIN EN ISO 14159 Machine safety – Hygienic requirements pertaining to the design of machinery.
- DIN EN 1672-2:2006 for food industry machinery.
- Follows EU low voltage ruling 2014/35/UE.
- RoHS Directive 2011/65/UE compliant.
- Machinery Directive 2006/42/EC (previously 89/37/EC) Food machinery and cosmetic or pharmaceutic production.
- EHEDG Guideline Hygienic Design doc.13 machinery for open processes.
- UL approval Nema 4x, 12, 3r, 1. N° File E342220.
- Maximum voltage 1000 V.
- Temperature resistant: -40°C +100°C (short time +160°C).
- Option silicone gasket: from -60°C to +180°C (short time up to +350°C).

PLAN

CLICK HERE TO DOWNLOAD
THE FILES CAD - PLANS - CERTIFICATES

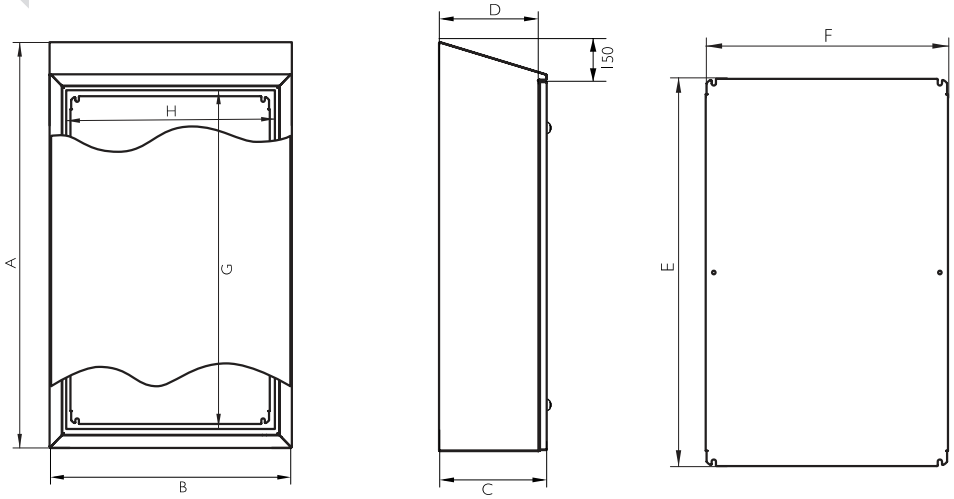

5 YEARS
MECHANICAL PARTS
GUARANTEE

10 YEARS
STAINLESS
ANTICORROSIVE
GUARANTEE

REFERENCES

REFERENCES	DIMENSIONS (mm)									
BLIND DOOR	HEIGHT -A-	WIDTH -B-	DEPTH -C-	ACCESS -GxH-	DEPTH INSIDE -D-	MECHANIZABLE AREA		PLATE MEASUREMENT -ExF-	WEIGHT (Kg)	VOLUME (m^3)
						DOOR	SIDE			
MVAJ503015	500	300	155	296x246	125	280,2x195,2	459,2x95	290x240	8,95	0,03
MVAJ723815	720	380		516x326		500,2x275,2	679,2x95	510x 320	15,25	0,05
MVAJ753821	750		210	546x326	180	530,2x275,2	709,2x150	540x320	17,23	0,07
MVAJ554021	550	400		346x346		330,2x295,2	509,2x150	340x340	13,51	0,05
MVAJ655021	650	500		446x446		430,2x395,2	609,2x150	440x440	18,91	0,08
MVAJ855021	850			646x446		630,2x395,2	809,2x150	640x440	24,23	0,10
MVAJ756021	750	600		546x546		530,2x495,2	709,2x150	540x540	25,13	0,11
MVAJ106030	1000		300	796x546	270	780,2x495,2	959,2x240	790x540	36,31	0,20
MVAJ108030		800		796x746		728x635	959,2x240	790x740	47,89	0,26
MVAJ128030	1200			996x746		928x635	1159,2x240	990x740	57,13	0,31
MVAJ148030	1400			1196x746		1128x635	1359,2x240	1190x740	65,92	0,36
MVAJ121030	1200	1000		996x946		928x835	1159,2x240	990x940	68,94	0,39
Version: Norm UL. Nema 4x, 12, 3r y 1				Add "UL" to reference. Ex: "MVAB302015UL"						
Version IP69K				Add "/69" to reference. Ex: "MVAB302015/69"						

Phone +34 945 601 381
comercial@delvalle.es | www.delvallebox.com

ENCLOSURE WITH HYIENIC GASKET



ELECTRICAL ENCLOSURE HYGIENIC LUXOR SERIES IP66

WITH SILICONE GASKET



Example

Monobloc Manufacture Gives Total Sealing and Maximum Resistance

Hygienic Design Luxor Electrical enclosure wall made of stainless steel AISI 304L or AISI 316L. Specially designed for the food industry.
No openings, hinges, where bacteria could lie but robust and easy lock opening with a big space inside to allow easy working. Moreover the inclination of the roof prevents objects being placed on the surface and our vertical electro polished finish helps repel liquids and prevent virus and bacteria building up on the surface.

FOR MORE INFORMATION CLICK HERE



ELECTRICAL ENCLOSURE HYGIENIC LUXOR SERIES IP66

APPLICATIONS

Especially designed for the food industry and sterile rooms, wineries, dairies and take away food outlets or any other place where cleanliness is essential as well as total absence of dust, dirt and bacteria.

5 YEARS
MECHANICAL PARTS **GUARANTEE**

10 YEARS
STAINLESS ANTICORROSIVE **GUARANTEE**

OPTIONS

- Custom made based on your needs.
- IP69K according EN 60529.
- Option painted galvanized steel finish in RAL 7035 or another color.
- Also made with two doors (from 800x600).
- Plinths at base and metal legs.
- Transparent polycarbonate door (no IP69K).
- Manufactured in stainless steel AISI 316L.
- Mounting plate insulator (bakelite) or sst.
- We have hygienic glands on request.

ADVANTAGES

- Supplied wrapped in protective film which prevents scratches and abrasions during handling.
- Resistant seal to temperatures from -60°C up to +200°C.
- The monobloc manufacture gives total sealing and maximum resistance.
- No openings where bacteria could lie.
- 90° door opening. Standard opening to the left. Specify if you need opening to the right.
- With electro-polished finish that helps dispel liquids and waterproof seal that prevents dirt and bacteria deposits.
- Delvalle supplies any measurements required including custom built holes and cut outs both for the door and enclosure.
- Temperature resistant: -40°C +100°C (short time +160°C).
- Option silicone gasket: from -60°C to +180°C (short time up to +350°C).
- Captives screws.
- Up to IP69K.

NORMATIVE

- IP66 Norm IEC 60529.
- DIN 40050-9 - IP69.
- Maximum IK10 resistance Norm IEC 62262.
- EC 1935/2004 rule compliant for materials intended to come into contact with food.
- DIN EN ISO 14159 Machine safety – Hygiene requirements pertaining to the design of machinery.
- Machinery Directive 2006/42/EC (previously 89/37/EC) Food machinery and cosmetic or pharmaceutic production.
- EHEDG Guideline Hygienic Design doc.13 machinery for open processes.
- DIN EN 1672-2:2006 for food industry machinery.
- Follows EU low voltage ruling 2014/35/UE.
- RoHS Directive 2011/65/UE compliant.
- UL approval Nema 4x, 12, 3r, 1. N° File E342220.
- Maximum voltage 1000 V.
- Temperature resistant: -40°C +100°C (short time +160°C).
- Option silicone gasket: from -60°C to +180°C (short time up to +350°C).

ELECTRICAL ENCLOSURE HYGIENIC LUXOR SERIES IP66

PLAN

CLICK HERE TO DOWNLOAD
THE FILES CAD - PLANS - CERTIFICATES

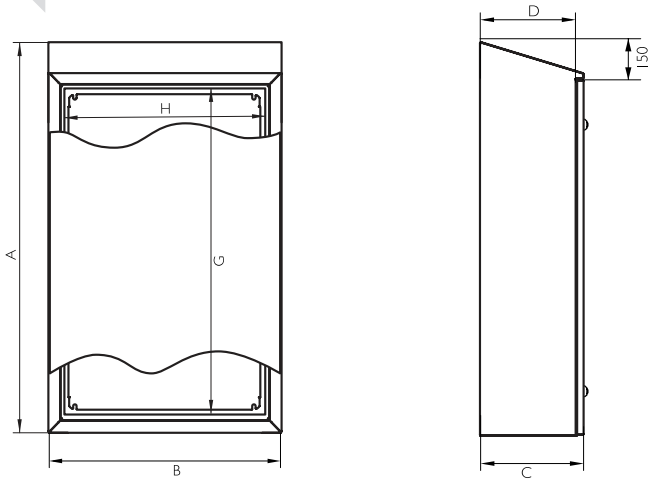

5 YEARS
MECHANICAL PARTS **GUARANTEE**

10 YEARS
STAINLESS ANTICORROSIVE **GUARANTEE**

REFERENCES 1 DOOR

REFERENCES	DIMENSIONS (mm)									
BLIND DOOR	HEIGHT -A-	WIDTH -B-	DEPTH -C-	ENTRY ACCESS -GXH-	DEEP USEFUL -D-	MECHANIZABLE AREA		PLATE MEASUREMENT -ExF-	WEIGHT (Kg)	VOLUME (m^3)
						DOOR	SIDE			
HDL373015	370	300	155	161x241	133,5	155,2x191	329,4x101	265x240	7,24	0,02
HDL452215	450	220	155	241x161	133,5	230,2x111	404,.4x101	340x160	6,86	0,02
HDL544021	540	400	210	331x341	188,5	325,2x291	499,4x156	435x340	13,93	0,05
HDL546021	540	600	210	331x541	188,5	325,2x491	499,4x156	435x540	19,39	0,08
HDL553921	550	390	210	341x331	188,5	330,2x281	504,4x156	440x330	13,88	0,05
HDL606121	600	610	210	391x551	188,5	380,2x501	554,4x156	490x550	24,26	0,12
HDL655121	650	510	210	441x451	188,5	430,2x401	604,4x156	540x450	20,07	0,08
HDL665021	660	500	210	451x441	188,5	445,2x391	619,4x156	555x440	20,02	0,08
HDL753921	750	390	210	541x331	188,5	530,2x281	704,4x156	640x330	18,47	0,07
HDL756121	750	610	210	541x551	188,5	530,2x501	704,4x156	640x550	26,5	0,11
HDL764521	760	450	210	551x391	188,5	545,2x341	719,4x156	655x540	20,92	0,08
HDL766021	760	600	210	551x541	188,5	545,2x491	719,4x156	655x540	26,45	0,11
HDL766030	760	600	300	551x541	278,5	545,2x491	719,4x246	655x540	29,06	0,15
HDL128130	1250	810	300	1041x751	278,5	1030,2x701	1204,4x246	1140x750	59	0,33
HDL128140	1250	810	400	1041x751	378,5	1030,2x701	1204,4x346	1140x750	63,75	0,43
HDL148130	1450	810	300	1241x751	278,5	1230,2x701	1404,4x246	1340x750	67,87	0,38
HDL148140	1450	810	400	1241x751	378,5	1230,2x701	1404,4x346	1340x750	73,1	0,50
Version IP69K				Add "/69" to reference. Ex."HDL373015/69"						

Delvalle custom made any size you can not find in this table. Available bottom to 1000 mm

MOUNTING OPTIONS



Wall support

WALL SUPPORT	
REFERENCES	MATERIAL
HD1000SOP	INOX 303
HD1000SOP/6	INOX 316

TRESTLE			
REFERENCES	HEIGHT	WIDTH	DEPTH
HDL208130BAS	200	810	300
HDL208140BAS	200	810	400
HDL308130BAS	300	810	300
HDL308140BAS	300	810	400



Trestle

Phone +34 945 601 381
comercial@delvalle.es | www.delvallebox.com

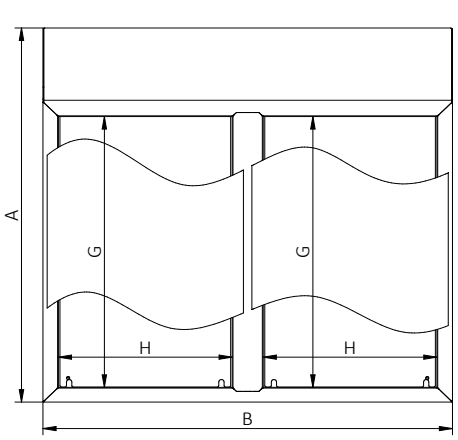

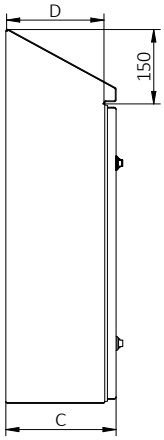

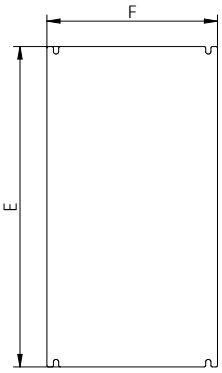

5 YEARS
MECHANICAL PARTS
GUARANTEE

10 YEARS
STAINLESS
ANTICORROSIVE
GUARANTEE

REFERENCES 2 DOORS

REFERENCES	DIMENSIONS (mm)									
BLIND DOOR	HEIGHT -A-	WIDTH -B-	DEPTH -C-	ENTRY ACCESS -GXH-	DEEP USEFUL -D-	MECHANIZABLE AREA		PLATE MEASUREMENT -ExF-	WEIGHT (Kg)	VOLUME (m^3)
						DOOR	SIDE			
HDL376015	370	600	155	161x241	133,5	155,2x191	329,4x101	265x240	12,3	0,04
HDL454415	450	440	155	241x161	133,5	230,2x111	404,.4x101	340x160	11,66	0,04
HDL548021	540	800	210	331x341	188,5	325,2x291	499,4x156	435x340	23,67	0,1
HDL541221	540	1200	210	331x541	188,5	325,2x491	499,4x156	435x540	32,95	0,16
HDL557821	550	780	210	341x331	188,5	330,2x281	504,4x156	440x330	23,59	0,10
HDL601221	600	1220	210	391x551	188,5	380,2x501	554,4x156	490x550	41,23	0,24
HDL651021	650	1020	210	441x451	188,5	430,2x401	604,4x156	540x450	34,1	0,16
HDL661021	660	1000	210	451x441	188,5	445,2x391	619,4x156	555x440	34,02	0,16
HDL757821	750	780	210	541x331	188,5	530,2x281	704,4x156	640x330	31,39	0,14
HDL751221	750	1220	210	541x551	188,5	530,2x501	704,4x156	640x550	45,03	0,22
HDL769021	760	900	210	551x391	188,5	545,2x341	719,4x156	655x540	35,55	0,16
HDL761221	760	1200	210	551x541	188,5	545,2x491	719,4x156	655x540	44,95	0,22
HDL761230	760	1200	300	551x541	278,5	545,2x491	719,4x246	655x540	49,39	0,30
HDL121630	1250	1620	300	1041x751	278,5	1030,2x701	1204,4x246	1140x750	100,27	0,66
HDL121640	1250	1620	400	1041x751	378,5	1030,2x701	1204,4x346	1140x750	108,34	0,86
HDL141630	1450	1620	300	1241x751	278,5	1230,2x701	1404,4x246	1340x750	115,34	0,76
HDL141640	1450	1620	400	1241x751	378,5	1230,2x701	1404,4x346	1340x750	124,23	0,96
Version: IP69K				Add "/69" to reference. Ex."HDL373015/69"						

Delvalle custom made any size you can not find in this table. Available bottom to 1000 mm



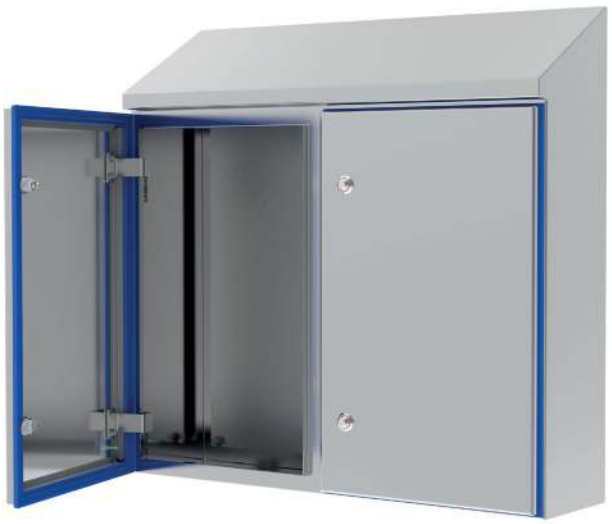

JUNCTION BOX HYGIENIC GEO SERIES IP66

WITH SILICONE GASKET



Example

The sides have an inclination of 3°

Strength, Durability and Long Life

Hygienic Geo Series push-button and junction boxes, elegant watertight boxes made wholly in finely polished AISI 304L EN-14306 stainless steel available in plain or bored covers (22.5).
Specially designed for placing push-buttons.

FOR MORE INFORMATION CLICK HERE

ADVANTAGES

- Supplied with protective film which prevents scratches and abrasions during handling.
- The manufacture of the stainless steel monobloc allows sealing and ensures maximum resistance.
- Water channel to prevent liquids coming into contact with the polyurethane seal and hidden hinges giving perfect sealing.
- Resistant seal to temperatures from -60°C up to +200°C.
- Captives srews.
- Finished in textured paint RAL on request.
- Up to IP69K.

APPLICATIONS

Especially designed and officially approved for food, chemical, pharmaceutical, transformer and telecommunication industries for use both inside and outside, due to the advantages of high resistance to chemical agents and durability.

OPTIONS

- Custom made based on your needs.
- IP69K according IEC EN 60529.
- Manufactured in stainless steel AISI 316L. EN 14404.
- Metal legs, unloosable screws.
- Transparent polycarbonate door or with tempered glass.
- Mounting plate insulator (bakelite) or painted steel.
- EMC version according to 2014/30/UE of electromagnetic compatibility
- We have hygienic glands on request.
- Option painted galvanized steel finish in RAL 7035 or another color.

Phone +34 945 601 381
comercial@delvalle.es | www.delvallebox.com

JUNCTION BOX HYGIENIC GEO SERIES IP66

NORMATIVE

- IP66 Norm IEC 60529 (IP67 on request).
- DIN 40050-9 - IP69.
- DIN EN ISO 14159 Machine safety – hygiene requirements pertaining to the design of machinery.
- Machinery Directive 2006/42/EC. Food machinery and cosmetic or pharmaceutic production.
- EHEDG Guideline Hygienic Design doc.13 machinery for open processes.
- Maximum IK10 resistance Norm IEC 62262.
- DIN EN 1672-2:2006 for food industry machinery.
- Manufactured following EU low voltage ruling 2014/35/UE
- RoHS Directive 2011/65/UE compliant.
- UL approval Nema 4x, 12, 3r, 1. N° File E342220.
- Maximum voltage 1000 V
- Temperature resistant: -40°C +100°C (short time +160°C).
- Option silicone gasket: from -60°C to +180°C (short time up to +350°C).

PLAN

CLICK HERE TO DOWNLOAD
THE FILES CAD - PLANS - CERTIFICATES

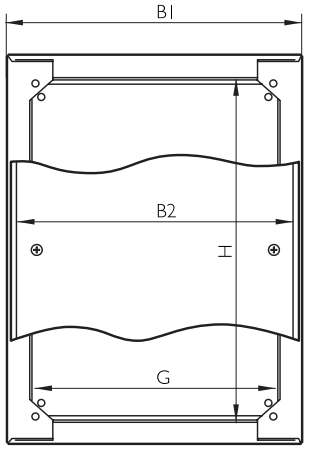

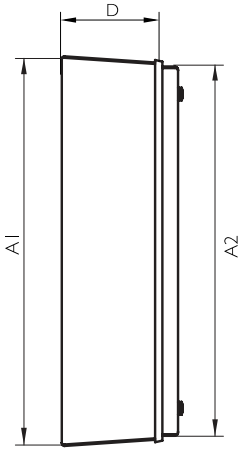

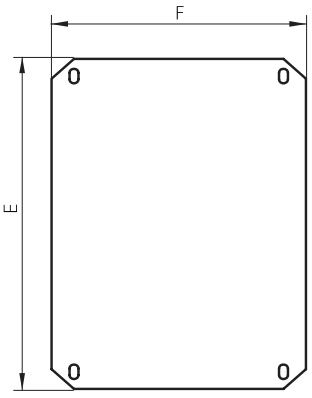

5 YEARS
MECHANICAL PARTS **GUARANTEE**

10 YEARS
STAINLESS ANTICORROSIVE **GUARANTEE**

REFERENCES

REFERENCES	DIMENSIONS (mm)											
BLIND DOOR	HEIGHT		WIDTH		DEPTH -C-	ENTRY ACCESS -GXH-	DEEP USEFUL -D-	AREA MECHANIZABLE COVER	AREA SIDE MECHANIZABLE	PLATE -EXF-	WEIGHTS (Kg)	VOL. (m^3)
	CORPS -A1-	COVER -A2-	CORPS -B1-	COVER -B2-								
HDG151580	156	150	156	150	80	110x110	59,8	80x80	124,6x26,1	100x120	1,72	0,003
HDG151512	160	150	160	150	120	110x110	99,8	80x80	128,8x66,2	100x120	2,06	0,004
HDG202012	210	200	210	200	120	160x160	99,8	130x130	178,8x66,2	150x170	3,09	0,007
HDG302012	310	300	210	200	120	260x160	99,8	230x130	278,8x66,2	250x170	4,17	0,010
HDG402012	410	400	310	200	120	360x160	99,8	330x130	378,8x66,2	350x170	6,3	0,019
HDG403012	410	400	310	300	120	360x260	99,8	330x230	378,8x66,2	350x270	7,25	0,019
Version normative Ul. Nema 4x, 12, 3r y 1					Add "UL" to reference. Ex:"HDG151580UL"							
Version IP69K					Add "/69" to reference. Ex."HDG151580/69"							

Delvalle custom made any size you can not find in this table. Available bottom to 1000 mm



WALL SUPPORT	
REFERENCES	MATERIAL
HD1000SOP	INOX 303
HD1000SOP/6	INOX 316

ELECTRICAL ENCLOSURE HYGIENIC TRIBECA SERIES IP66

WITH SILICONE GASKET



Examples



Monobloc Manufacture Gives Total Sealing and Maximum Resistance

Electrical Hygienic Design Tribeca Series enclosure with a large capacity, specially designed for the food industry.
No openings, hinges, where bacteria could lie. Easy opening by rotating handle and four point lock, easy placement on the floor, flexible, maximum working width.
Moreover the inclination of the roof prevents objects being placed on the surface and our vertical electro polished finish helps repel liquids and prevent virus and bacteria building up on the surface.

FOR MORE INFORMATION CLICK HERE

APPLICATIONS

Especially designed for the food industry and sterile rooms, wineries, dairies and take away food outlets or any other place where cleanliness is essential as well as total absence of dust, dirt and bacteria.

ELECTRICAL ENCLOSURE HYGIENIC TRIBECA SERIES IP66

ADVANTAGES

- Supplied wrapped in protective film which prevents scratches and abrasions during handling.
- Resistant seal to temperatures from -60°C up to +200°C.
- The monobloc manufacture gives total sealing and maximum resistance.
- No openings where bacteria could lie.
- With electro-polished finish that helps to slide the liquid and waterproof seal that prevents dirt and bacteria deposits.
- 100% stainless steel from handle to opening system. 120° door opening. Standard opening to the left.
- Specify if you need opening to the right.
- Standard electrical panel and handle lock with four locking points and concealed stainless steel hinges.
- Delvalle supplies any measurements required including custom built holes and cut outs both for the door and enclosure.
- Distribuited load 600 Kg.
- Captives screws.

OPTIONS

- IP69K protection.
- Option painted galvanized steel finish in RAL 7035 or another color.
- Custom made based on your needs.
- With a choice of two doors (from 1200 mm width).
- Plinths at base. Castors. Metal legs.
- Clear polycarbonate door or tansparent safety glass door (no IP69K).
- Manufactured in stainless steel AISI 316L. EN 14404.
- Mounting plate insulator (bakelite) or stainless steel.
- We have hygienic glands on request.



NORMATIVE

- IP66 by request. Norm IEC 60529.
- DIN 40050-9 - IP69.
- Maximum IK10 resistance Norm IEC 62262.
- EC 1935/2004 rule compliant for materials intended to come into contact with food.
- DIN EN ISO 14159 Machine safety – Hygienic requirements pertaining to the design of machinery.
- Machinery Directive 2006/42/EC (previously 89/37/EC) Food machinery and cosmetic or pharmaceutic production.
- EHEDG Guideline Hygienic Design doc.13 machinery for open processes.
- DIN EN 1672-2:2006 for food industry machinery.
- Manufactured following EU low voltage ruling 2014/35/UE.
- Compliant RoHS Directive.
- UL approval Nema 4x, 12, 3r, 1. N° File E342220.
- Maximum voltage 1000 V.
- Temperature resistant: -40°C +100°C (short time +160°C).
- Option silicone gasket: from -60°C to +180°C (short time up to +350°C).

ELECTRICAL ENCLOSURE HYGIENIC TRIBECA SERIES IP66

PLAN

CLICK HERE TO DOWNLOAD
THE FILES CAD - PLANS - CERTIFICATES

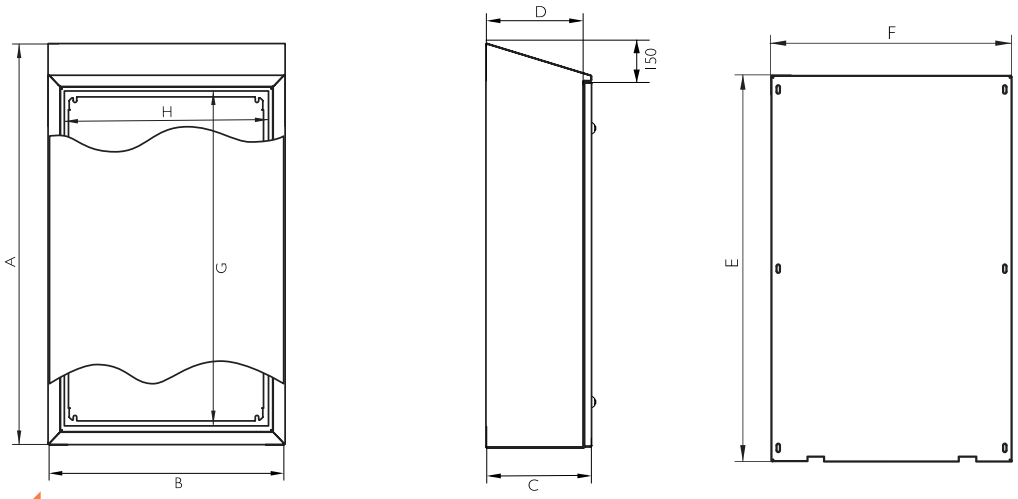

5 YEARS
MECHANICAL PARTS **GUARANTEE**

10 YEARS
STAINLESS ANTICORROSIVE **GUARANTEE**

REFERENCES

REFERENCES	DIMENSIONS(mm)									
BLIND DOOR	HEIGHT -A-	WIDTH -B-	DEPTH -C-	ENTRY ACCESS -GXH-	DEPTH USEFUL -D-	AREA MECANIZABLE DOOR	AREA SIDE MECANIZABLE	ACCESS PLATE MEASUREMENT -ExF-	WEIGHT (Kg)	VOLUME (m^3)
HDT166040	1650	600	400	1447x500	375,5	1424x487,8	1614,8x344	1520x490	70,9	0,42
HDT167040	1650	700	400	1447x600	375,5	1424x587,8	1614,8x344	1520x590	82,7	0,49
HDT168040	1650	800	400	1447x700	375,5	1424x687,8	1614,8x344	1520x690	94,5	0,56
HDT161040	1650	1000	400	1447x900	375,5	1424x887,8	1614,8x344	1520x890	111,41	0,66
HDT161050	1650	1000	500	1447x900	475,5	1424x887,8	1766x444	1520x890	119,69	0,85
HDT186040	1800	600	400	1597x500	375,5	1574x487,8	1764,8x344	1670x490	77,65	0,46
HDT187040	1800	700	400	1597x600	375,5	1574x587,8	1764,8x344	1670x590	91,12	0,54
HDT188040	1800	800	400	1597x700	375,5	1574x687,8	1764,8x344	1670x690	102,97	0,61
HDT181040	1800	1000	400	1597x900	375,5	1574x887,8	1764,8x344	1670x890	126,6	0,75
HDT181050	1800	1000	500	1597x900	475,5	1574x887,8	1966x444	1870x890	130,68	0,93
HDT206040	2000	600	400	1797x500	375,5	1774x487,8	1964,8x344	1870x490	86,09	0,51
HDT207040	2000	700	400	1797x600	375,5	1774x587,8	1964,8x344	1870x590	94,13	0,59
HDT208040	2000	800	400	1797x700	375,5	1774x687,8	1964,8x344	1870x690	103,10	0,67
HDT201040	2000	1000	400	1797x900	375,5	1774x887,8	1964,8x344	1870x890	117,58	0,83
HDT201050	2000	1000	500	1797x900	475,5	1774x887,8	1966x444	1870x890	140	1,03
Version: IP69K				Add: "/69" to reference Ex. "HDT166040/69"						

Delvalle custom made any size you can not find in this table. Available bottom to 1000 mm

MOUNTING OPTIONS



Metal legs

TRESTLE
REFERENCE
HD2000PAT

METAL LEGS			
REFERENCES	HEIGHT	WIDTH	DEPTH
HDT186040BAS	200	600	400
HDT188040BAS	200	800	400
HDT181040BAS	200	1000	400
HDT186050BAS	200	600	500
HDT188050BAS	200	800	500
HDT181050BAS	200	1000	500
HDT206040BAS	300	600	400
HDT208040BAS	300	800	400
HDT201040BAS	300	1000	400
HDT206050BAS	300	600	500
HDT208050BAS	300	800	500
HDT201050BAS	300	1000	500



Trestle

Phone +34 945 601 381
comercial@delvalle.es | www.delvallebox.com

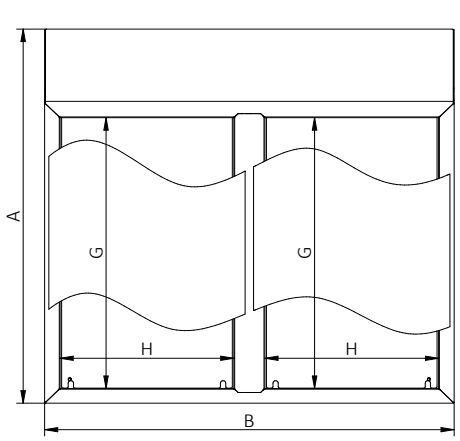

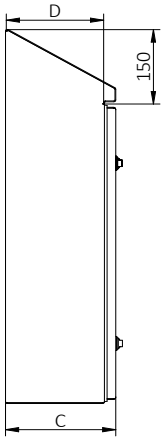

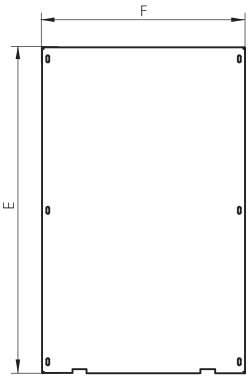

2 plates per cabinet

5 YEARS
MECHANICAL PARTS **GUARANTEE**

10 YEARS
STAINLESS ANTICORROSIVE **GUARANTEE**

REFERENCIAS 2 PUERTAS

REFERENCES	DIMENSIONS (mm)									
BLIND DOOR	HEIGHT -A-	WIDTH -B-	DEPTH -C-	ENTRY ACCESS -GXH-	DEPTH USEFUL -D-	AREA MECANIZABLE DOOR	AREA SIDE MECANIZABLE	ACCESS PLATE MEASUREMENT -ExF-	WEIGHT (Kg)	VOLUME (m^3)
HDT166040	1650	1200	400	1447x500	375,5	1424x487,8	1614,8x344	1520x490	123.1	0,84
HDT167040	1650	1400	400	1447x600	375,5	1424x587,8	1614,8x344	1520x590	146,4	0,98
HDT168040	1650	1600	400	1447x700	375,5	1424x687,8	1614,8x344	1520x690	170,7	1,2
HDT161040	1650	2000	400	1447x900	375,5	1424x887,8	1614,8x344	1520x890	201,62	1,25
HDT161050	1650	2000	500	1447x900	475,5	1424x887,8	1766x444	1520x890	217,35	1,69
HDT186040	1800	1200	400	1597x500	375,5	1574x487,8	1764,8x344	1670x490	136,8	0,93
HDT187040	1800	1400	400	1597x600	375,5	1574x587,8	1764,8x344	1670x590	161,54	1,01
HDT188040	1800	1600	400	1597x700	375,5	1574x687,8	1764,8x344	1670x690	184,54	1,18
HDT181040	1800	2000	400	1597x900	375,5	1574x887,8	1764,8x344	1670x890	231,91	1,52
HDT181050	1800	2000	500	1597x900	475,5	1574x887,8	1966x444	1870x890	239,26	1,86
HDT206040	2000	1200	400	1797x500	375,5	1774x487,8	1964,8x344	1870x490	151,78	1,12
HDT207040	2000	1400	400	1797x600	375,5	1774x587,8	1964,8x344	1870x590	166,67	1,19
HDT208040	2000	1600	400	1797x700	375,5	1774x687,8	1964,8x344	1870x690	184,51	1,31
HDT201040	2000	2000	400	1797x900	375,5	1774x887,8	1964,8x344	1870x890	212,67	1,61
HDT201050	2000	2000	500	1797x900	475,5	1774x887,8	1966x444	1870x890	256,9	2,05
Version: IP69K				Add "/69" to reference Ex:"HDT166040/69"						

Delvalle custom made any size you can not find in this table. Available bottom to 1000 mm





TERMOELECTRIC HYGIENIC SERIES IP67



Example



Thermoelectric Cooler Optimized for Applications in Hygienic Areas

The thermoelectric hygienic work with the innovative Peltier-Technology, offering compact, dependable, power-saving air conditioning 50 W.

The Peltier-Technology permits the use in any position, high degree of protection for outdoor use in bad environments and also for example a mobile use in high vibration application.

The Peltier-Technology works without any compressor, cooling liquid or filter mat and is nearly maintanance-free. The robust design with the heatsink made of aluminum and the stainless-steel cover on the outside makes it perfectly suitable for every sophisticated application.

FOR MORE INFORMATION CLICK HERE

FEATURES

- Thermoelectric cooler optimized for applications in hygienic areas.
- Approved materials: stainless steel AISI 304L V2A, anodized aluminium.
- Plain and rounded transistions and edges.
- Easy to clean due to large distances.
- Special silicone seal.
- Degree of protection IP67.

TECHNICAL SPECIFICATIONS

- Cooling capacity: 50 W.
- Operating voltage: 24 V DC.
- Amperage: 2,5 A.
- Operating temperature: -10 to +60 °C.
- Degree of protection (outside): IP67.
- Approval: CE.
- Weight: 3,2 kg.

REFERENCES

REFERENCE	COOLING CAPACITY	OPERATING VOLTAGE	AMPERAGE	HEIGHT	WIDTH
MVTEC050E_HD	50W	24 VDC	2.5 A	200	182

METRIC STAINLESS STEEL CABLE GLANDS **HYGIENIC SERIES** IP68

Hygienic glands are fit for passing, pressing and fixing cables between two compartments such as junction boxes, electric enclosures or any cabinet where protection against dust, dirt or water is required.

Made in stainless steel, hygienic glands are a definite solution against dirt and germs. They are the only glands tested according to FDA and EHEDG standards. We have the widest range from M12 to M25 and the highest quality.





- Material: Stainless steel AISI303L (other materials on request).
- Thread: TPE according to FDA guideline 21 CFR 177.2600 (PG and NPT upon request).
- Protection:
  - IP68 (5 bar, 30 min) according EN 60529.
  - IP69K extend IEC 60529
- Temperature resistance:
  - -20°C to +100°C.
  - -40°C to +150°C short time.
- Applications: manufacturing food, clean room technology, biotechnology and chemical industry.
- Benefits
  - Smooth finish prevents harmful microorganisms sticking to the surface.
  - No threads are exposed. Cleaning of cable glands is easier, faster and less expensive compared to traditional stainless steel cable glands.
  - Reliable strain relief due to strain relief element separated from grommet.
  - Suitable for high pressure steam cleaning.

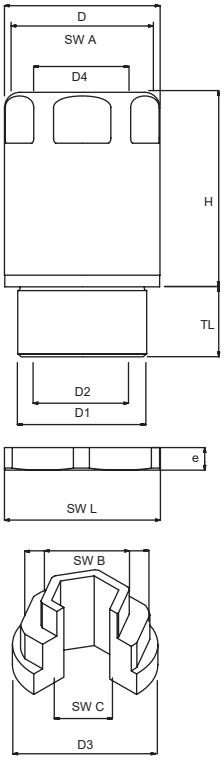

REFERENCES METRIC STAINLESS STEEL HYGIENIC CABLE GLANDS													
REFERENCE CABLE GLANDS + LOCK NUT	THREAD	CABLE CLAMPING RANGE (mm)	CABLE GLANDS DIMENSIONS								LOCK NUT DIMENSIONS		
			SWA (mm)	D (mm)	D1 (mm)	D2 (mm)	D4 (mm)	H (mm)	TL (mm)	CAP TIGHTENING TORQUE NM	SWL (mm)	E (mm)	LOCKNUT TIGHTENING TORQUE NM
HDSS.12	M12x1,5	3,0-6,5	14	15,6	12	7,0	6,8	21,5	6	2,5	15	2,8	6,0
HDSS.16	M16x1,5	5,0-10,0	18	20,2	16	10,5	10,3	28,5	7	4,0	19	3,0	9,0
HDSS.20	M20x1,5	6,0-12,0	22	24,1	20	12,5	12,3	33,0	10	5,0	24	3,5	12,0
HDSS.25	M25x1,5	12,0-17,0	28	30,1	25	17,5	17,3	38	14	6,0	30	4	14,0

REFERENCES METRIC EMC STAINLESS STEEL HYGIENIC CABLE GLANDS													
REFERENCE EMC CABLE GLANDS + LOCK NUT	THREAD	CABLE CLAMPING RANGE (mm)	CABLE GLANDS DIMENSIONS								LOCK NUT DIMENSIONS		
			SWA (mm)	D (mm)	D1 (mm)	D2 (mm)	D4 (mm)	H (mm)	TL (mm)	CAP TIGHTENING TORQUE NM	SWL (mm)	E (mm)	LOCKNUT TIGHTENING TORQUE NM
HDSS.16.EMC	M16x1,5	5,0-10,0	18	20,2	16	10,0	10,3	28,5	7	4,0	19	3,0	9,0
HDSS.20.EMC	M20x1,5	6,0-12,0	22	24,1	20	13,5	12,3	33,0	10	5,0	24	3,5	12,0
HDSS.25.EMC	M25x1,5	12,0-17,0	28	30,1	25	17,5	17,3	38,0	14	6,0	30	4,0	14,0

REFERENCES TIGHTENING TOOL				
REFERENCE	THREAD	SWB (mm)	SWC (mm)	H (mm)
MVF9T-01	M12	5	7	5
MVF9T-02	M16	6	10	5
MVF9T-03	M20	8	13	8
MVF9T-04	M25	10	17	8

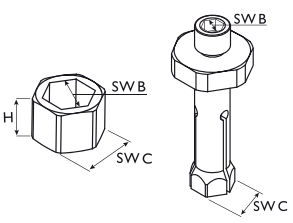

Available upon request

REFERENCES SPECIAL TOOL			
REFERENCE	THREAD	SWB (mm)	SWC (mm)
MVFGST-02	M16	6	10
MVFGST-03	M20	8	13
MVFGST-04	M25	10	17

Consult us without obligation

Confidentiality, reliability & quality

DELVALLE OFFERS
OTHER SOLUTIONS

FOR MORE INFORMATION CLICK HERE

www.delvallebox.com
comercial@delvalle.es
+34 945 601 381

ALSO ONLINE

STAINLESS STEEL INDUSTRIAL ENCLOSURES



OUTDOOR HEAVY DUTY ELECTRICAL ENCLOSURES

OUTDOOR TELECOM 19 RACKS & CABINETS



GALVANIZED STEEL ELECTRICAL ENCLOSURES

HYGIENIC DESIGN ENCLOSURES



ALUMINIUM ELECTRICAL ENCLOSURES

delvalle®

Consult us without obligation

Confidentiality, reliability & quality

DELVALLE OFFERS
OTHER SOLUTIONS

FOR MORE INFORMATION CLICK HERE

www.delvallebox.com
comercial@delvalle.es
+34 945 601 381
ALSO ONLINE

WATERPROOF SHEET STEEL ELECTRICAL ENCLOSURES



CLIMATE CONTROL COOLING FOR ELECTRICAL ENCLOSURES

NEMA ELECTRICAL ENCLOSURES TYPE 1-3R-4X-12



MODULAR DISTRIBUTION ENCLOSURES

EMC ELECTRICAL ENCLOSURES SOLUTIONS



CABLE GLANDS & ENTRY SEALS FOR CABINETS

delvalle®

ENCLOSURES & CABINETS FOR SPECIAL REQUIREMENTS



Paso del Prao, 6. 01320 Oyón (Álava). Spain
Telf. +34 945 601 381
www.delvallebox.com - comercial@delvalle.es

Contact us, we will be available at any time